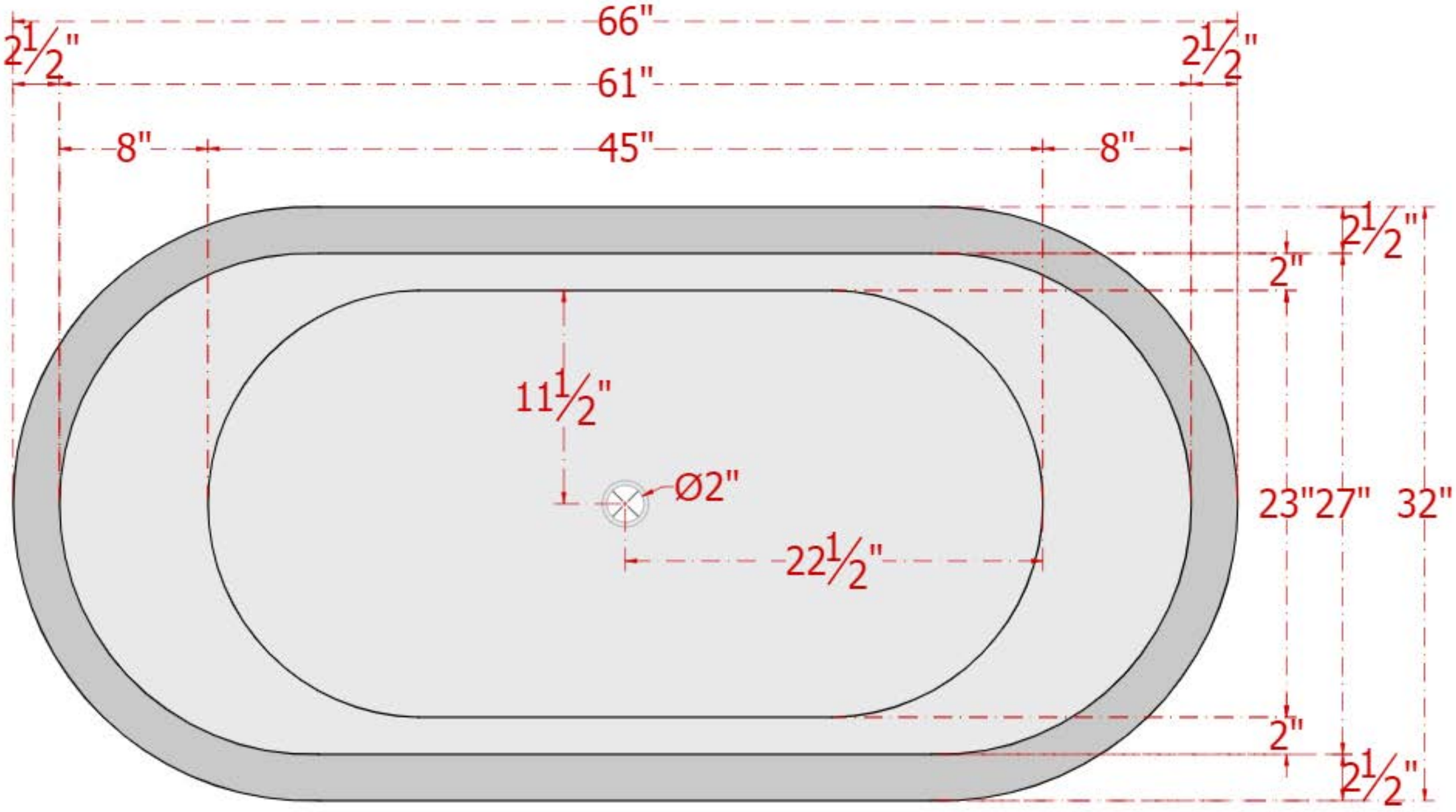
66"
2½"
61"
2½"
8"
45"
8"
2½"
2"
11½"
Ø2"
23"
27"
32"
22½"
2"
2½"

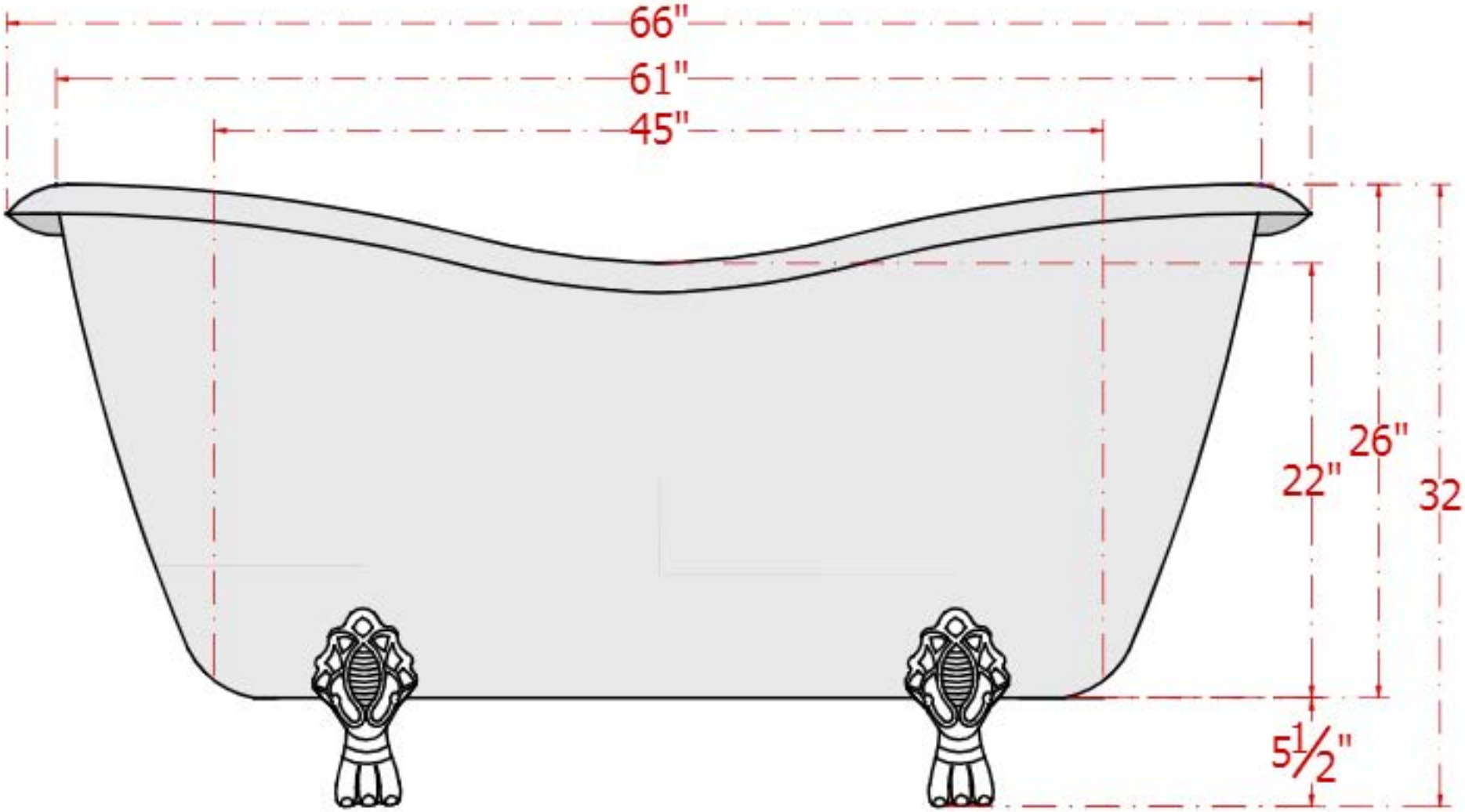
66"
61"
45"
26"
22"
32
5½"

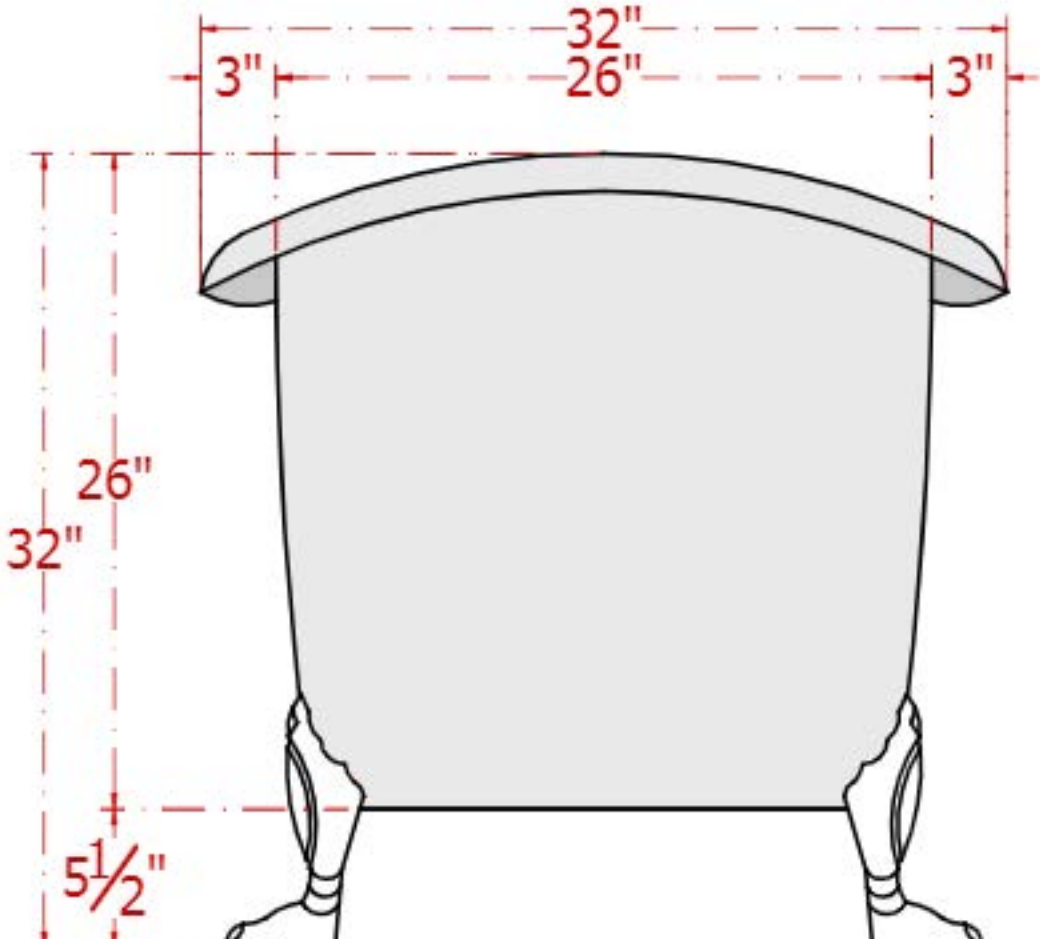
32"
3"
26"
3"
26"
32"
5½"