Power Take Off Gear Pumps

HP-GP20 hydraulic PTO pumps Bi Rotational gear pumps offer excellent flow and pressure characteristics. Manufactured in 2 pieces from high quality material to give maximum performance in the toughest of conditions. The Bi-rotational option means no chance of getting the wrong rotation pump and maintains the same pressure characteristics as the uni-directional pumps. Also with side or rear entry options.

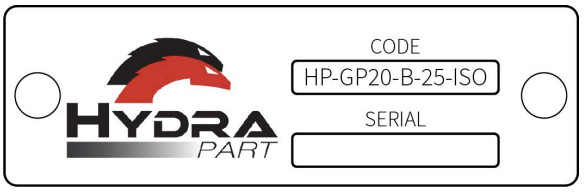

PUMP SERIES	DIRECTION OF ROTATION	DISPLACEMENT (CM^3)	FLANGE TYPE
X	X	X	X

CODE SYSTEMS

HYDRAULIC SYMBOL

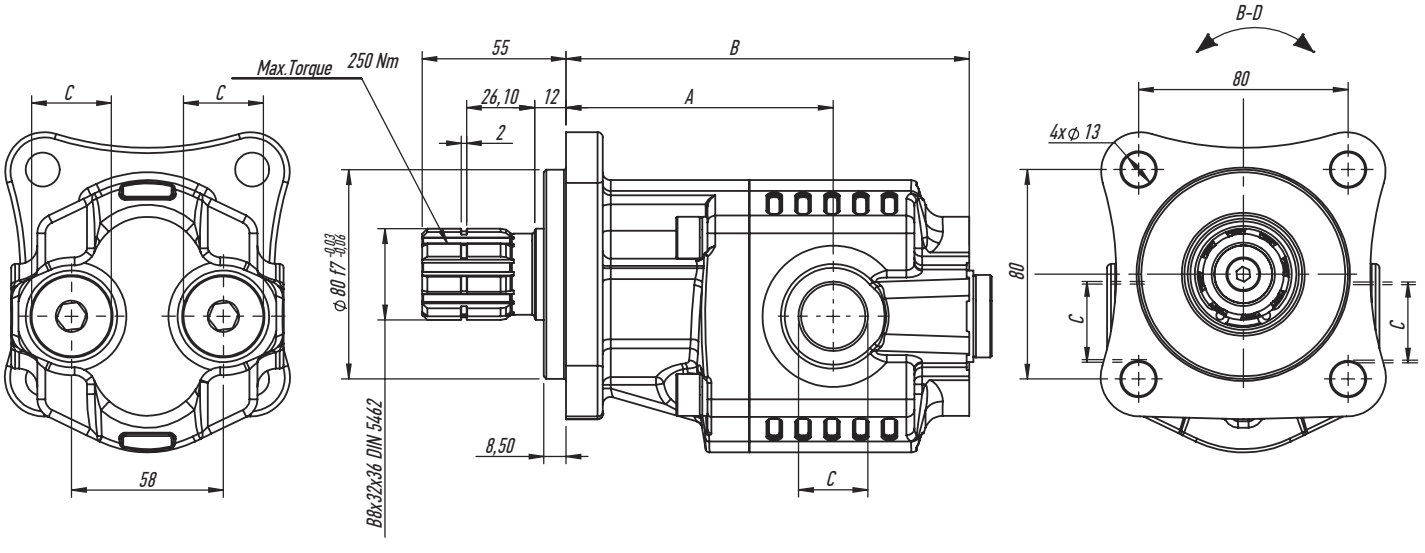

TECHNICAL DATA

Code		ISO 6-BD	ISO 10-BD	ISO 16-BD	ISO-20-BD	ISO 25-BD	ISO 32-BD	ISO 40-BD
Displacement	cm^3	6.1	10.02	16.2	20.12	25.05	32.18	40.15
Dimension A	mm	90	96	96	100	102	113	126
Dimension B	mm	124	130	140	146	154	165	178
Inlet / Outlet	C	G1/2"	G1/2"	G1/2"	G1/2"	G3/4"	G3/4"	G3/4"
Weight	kg	5.5	5.8	6	6.5	7	7.5	8
Max.Continuous Pressure	bar	280	280	280	260	220	190	180
Max.Intermittent Pressure (20 sec.max)	bar	300	300	300	280	250	200	190
Max.Peak Pressure (6 sec.max)	bar	330	330	330	300	270	220	200
Max.Continuous Speed	rpm	2300	2300	2300	2300	2300	2100	1900
Max.Intermittent Speed	rpm	3100	3100	3100	3100	3100	2900	2600
Min.Speed	rpm	300	300	300	300	300	300	300