Power Take Off Gear Pumps

HP-GP30 hydraulic PTO pumps Bi Rotational gear pumps offer excellent flow and pressure characteristics. Manufactured in 2 pieces from high quality material to give maximum performance in the toughest of conditions. The Bi-rotational option means no chance of getting the wrong rotation pump and maintains the same pressure characteristics as the uni-directional pumps.

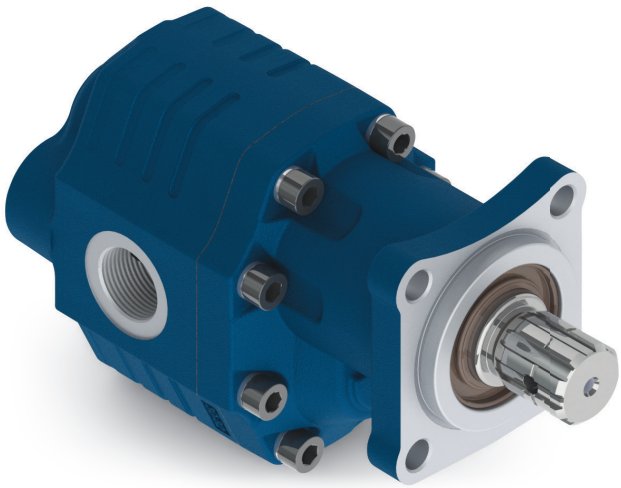

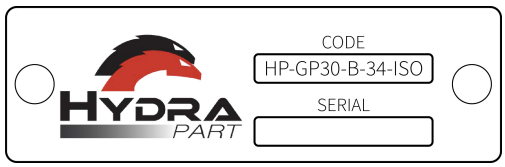

PUMP SERIES	DIRECTION OF ROTATION	DISPLACEMENT (CM^3)	FLANGE TYPE
X	X	X	X

CODE SYSTEMS

HYDRAULIC SYMBOL

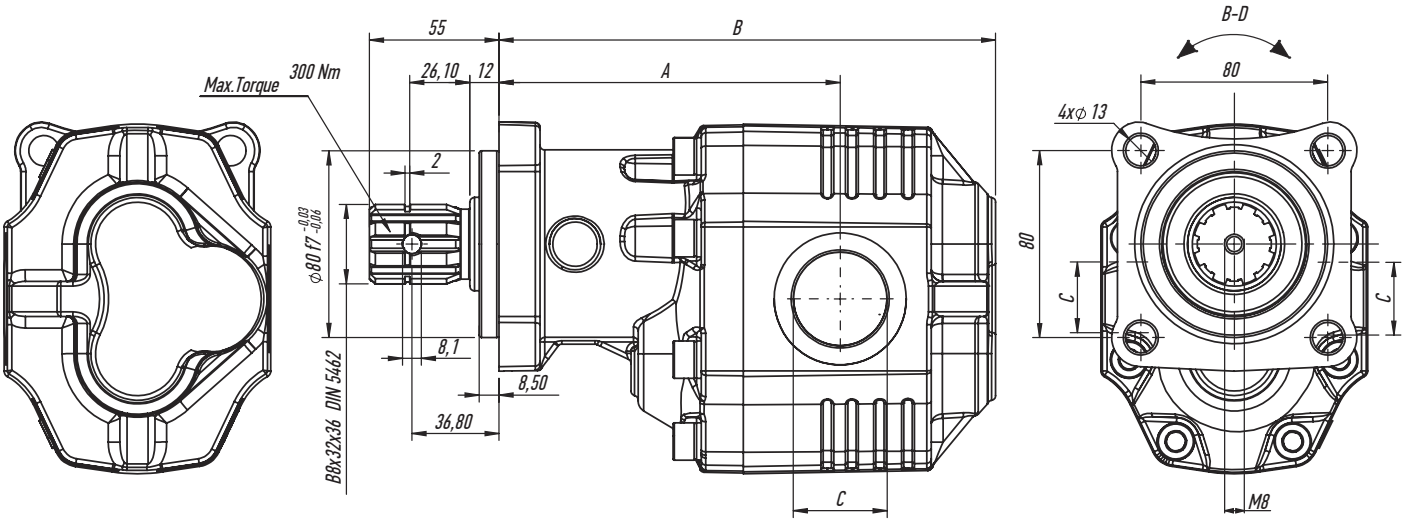

TECHNICAL DATA

Code		ISO 17-BD	ISO 27-BD	ISO 34-BD	ISO 43-BD	ISO 51-BD	ISO 61-BD	ISO 82-BD	ISO 100-BD	ISO 125-BD
Displacement	cm^3 /rev	17.2	27.3	33.8	43.8	51.73	61.95	82.13	102.5	127.5
Dimension A	mm	124.5	129.5	130.5	135.5	135.5	142	146	160	164
Dimension B	mm	171.5	177.5	182.5	188.5	193.5	201.5	212.5	225.5	241.5
Inlet	C	G1/2"		G3/4"			G1"	G1 1/4"		
Outlet	C	G1/2"		G3/4"			G1"	G1 1/4"		
Weight	kg	10.5	11	11.5	12	12.5	13	14	15	17
Max.Continuous Pressure	bar	300	290	285	280	230	225	200	190	170
Max.Intermittent Pressure (20 sec.max)	bar	310	300	295	290	260	240	210	200	190
Max.Peak Pressure (6 sec.max)	bar	320	310	305	300	280	260	220	220	200
Max.Continuous Speed	rpm	2600	2600	2300	2100	2100	2000	1700	1600	1600
Max.Intermittent Speed	rpm	3000	3000	2900	2600	2600	2100	1900	1900	1900
Min.Speed	rpm	300	300	300	300	300	300	300	300	300