6 Port Solenoid Diverter Valve

3/8" Open Centre 50LPM 12/24vDC

Hydra Part stackable circuit diverter valves with up to 5 units connected in series. Solenoid operation negates the need for external drainage and manage high power with minimal pressure drop.

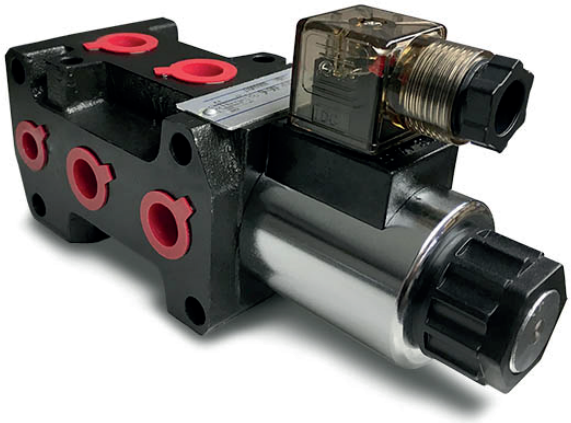

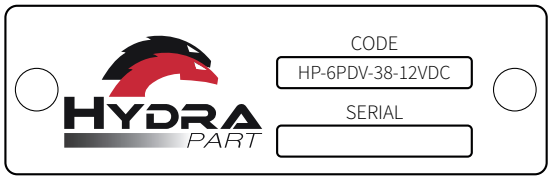

HYDRA PART	SERIES CODE	BSP	COIL VOLTAGE
X	X	X	X

Installation Dimensions

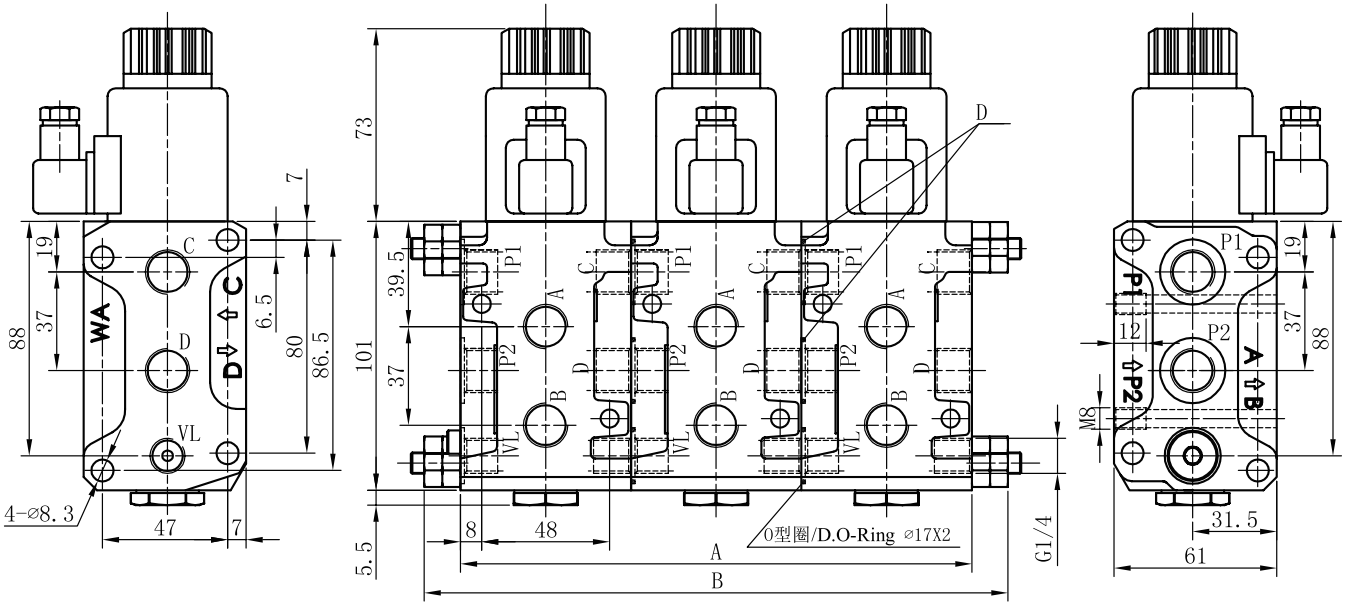

M18X1.5/G3/8=Φ21X2
M22X1.5/G1/2=Φ23.5X2

SYMBOL

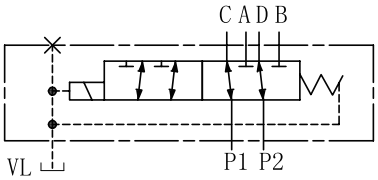

MULTSTATION CONNECTION

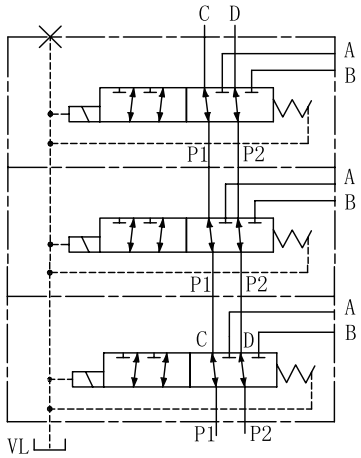

Technical data

Model	6PDV-38 (MOP6/DVS6)
Max Flow rate (L/min)	50
Max operating pressure (MPa)	25
Valve body (Material) Surface treatment	(casting) phosphating surface
Oil cleanliness	NAS1638 class 9 and ISO4406 class 20/18/15