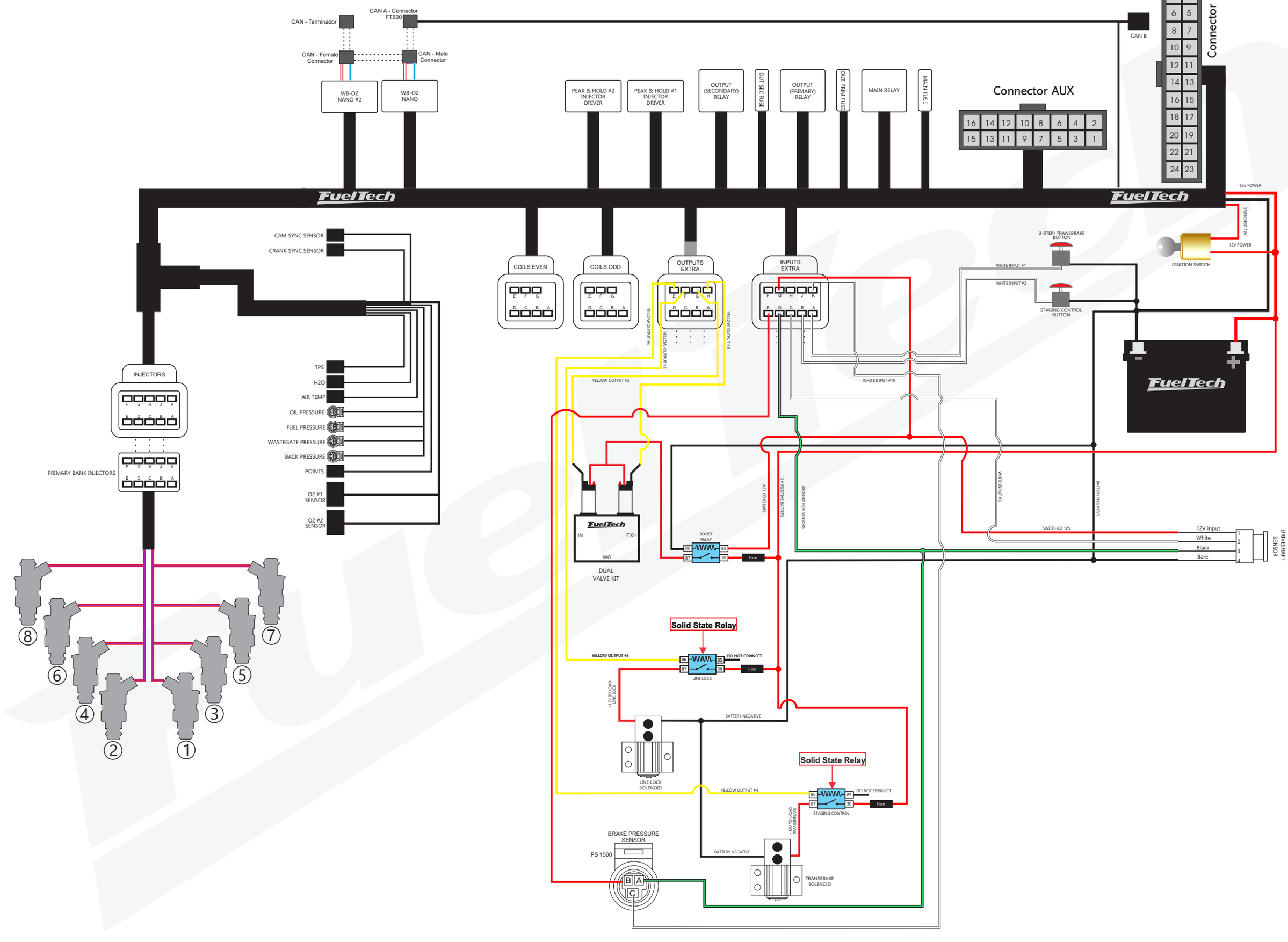FuelTech FT500 LS - Twin turbo, GAS/E85 8 inj, DIST/MAG