Metal Drawer Sides - DSB0230
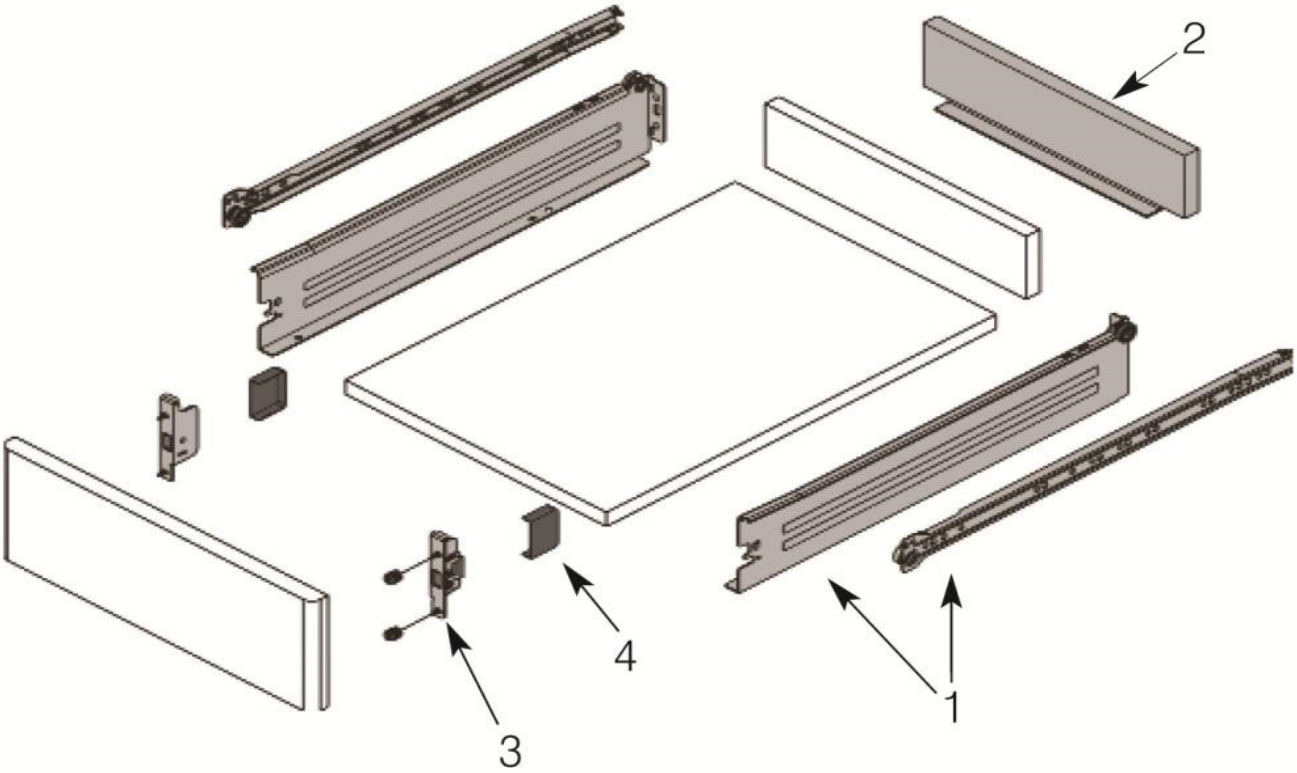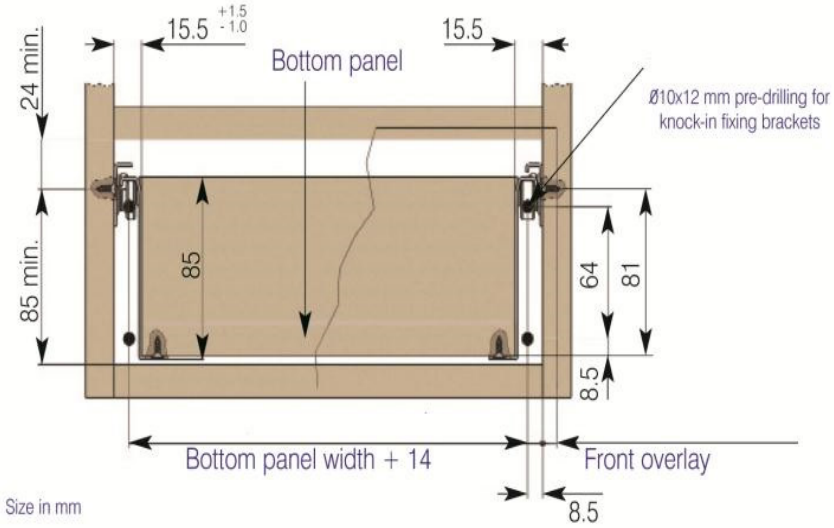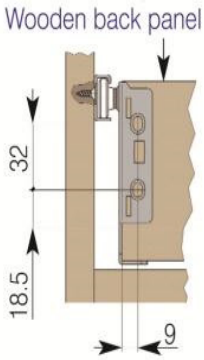
Height: 118mm
Length: 350mm
Load Rating: 25kg
Extension: 75%
Finish: White