**Metal Drawer Sides - DSB0229**
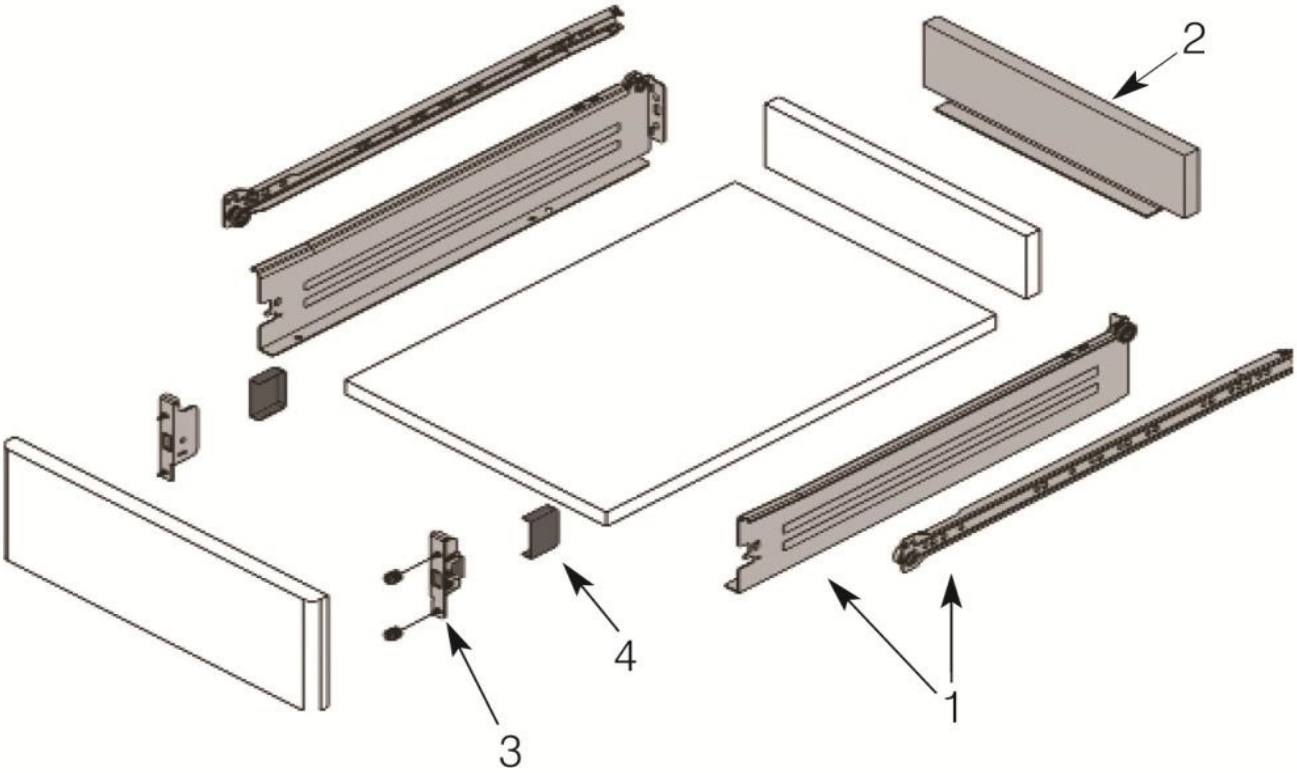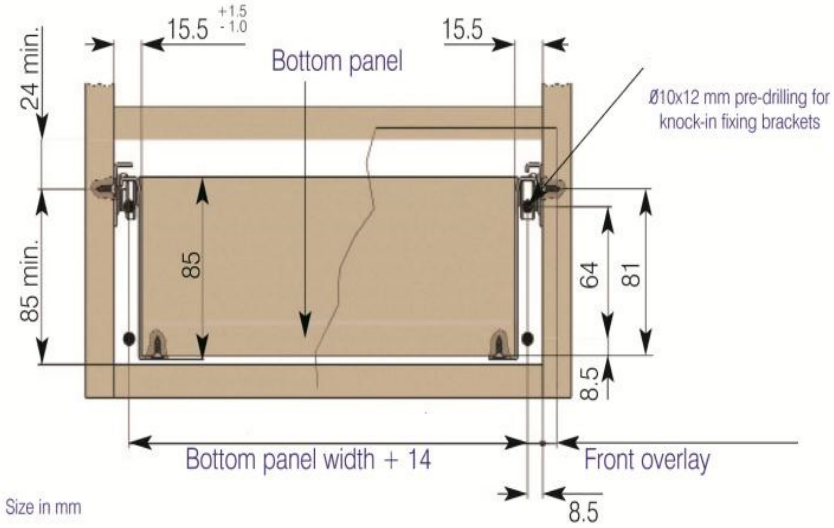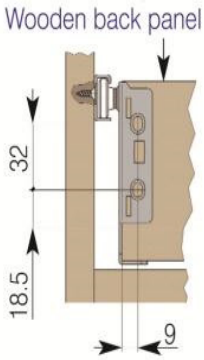
**Height:** 118mm
**Length:** 270mm
**Load Rating:** 25kg
**Extension:** 75%
**Finish:** White