Saniaccess® 3 PART Nº 082

CONNECTIONS

- Discharge: 3/4” or 1”
- Inlet: 2”
- Vent: 1-1/2”
- Easy-access to blade, pressure chamber/electrical parts for easy service/replacement.

PRODUCT FEATURES

- Install a complete bathroom up to 15 feet below the sewer line, or even up to 150 feet away.
- Macerating system for residential/commercial applications.
- The blade is made out of a hardened stainless steel material which eliminates the need for any service or replacement.

PUMP CURVE

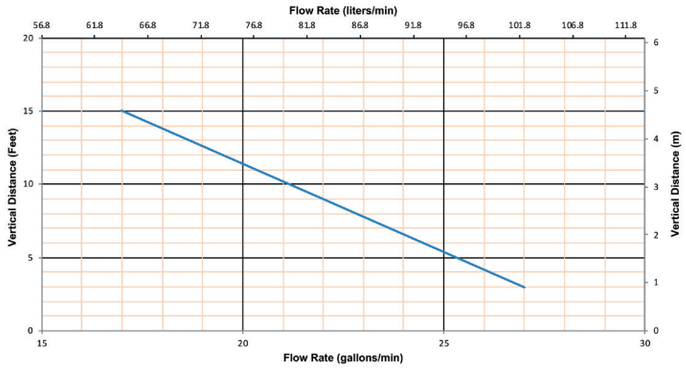

OPTIONAL ACCESSORIES

Extension Pipe
(Part Nº 030)
See page 28

Descaler
(Part Nº 052)
See page 28

TECHNICAL SPECIFICATIONS

Pump type: Macerator
Electrical: 120 V – 60 Hz / 4.5 Amps (Max)
Motor: 0.5 HP oil-filled thermally protected motor
Capacitor rating: 45 microfarad
Operating Temperature: 104°F (110°F Max.)
Power cord length: 51 inches
Noise level: ≤ 53 dBA (Lp) (measured at 3 ft.)
Discharge pipe diameter: 3⁄4” or 1”
Discharge rate at 15 ft: 17 GPM
Discharge rate at 3 ft: 27 GPM
Shut-off head: 30 ft.
Normal running time: 10-12s
Capacity: 3.1 gallons / 11.7 liters
Inlets: 2” (sides), 1–1⁄2” vent (top)
Method of activation: Membrane/microswitch
Shower/bathtub base height: 6” min
Weight: 18 lbs / 8.2 kg.
Certifying agencies: CSA (IPC, NSPC), IAPMO (UPC)
Connections: Saniflo’s rear outlet toilet, sink, shower/bathtub
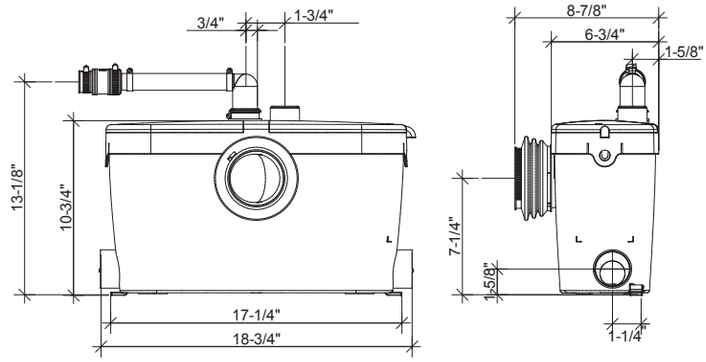
DIMENSIONAL DRAWINGS