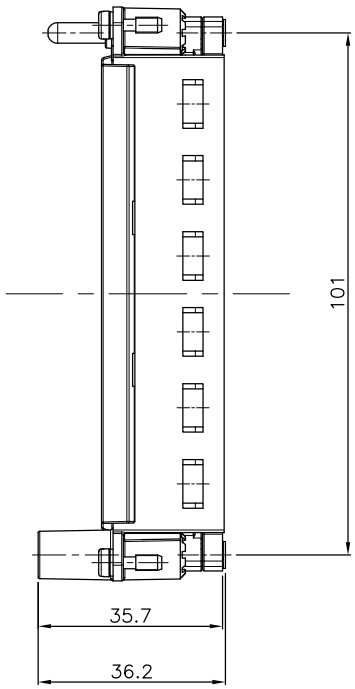

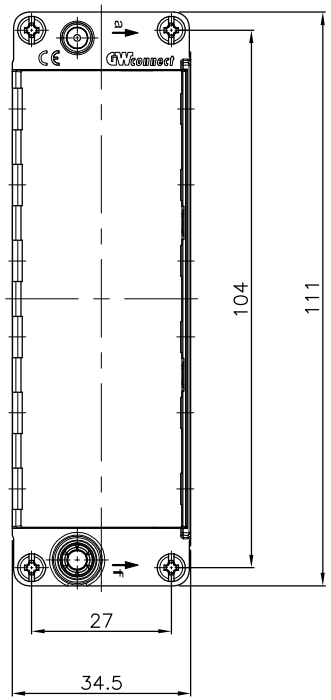

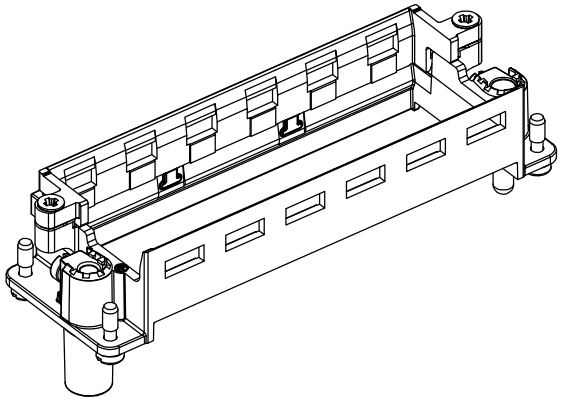

TECHNICAL CHARACTERISTICS CARATTERISTICHE TECNICHE	
Size Grandezza	24B 104x27
Material Materiale	Aluminium Alluminio
Temperature limits Limiti di temperatura	- 40°C to + 125°C
Type for Tipo per	Housing a-f
N° modules N° moduli	6

THIS DRAWING CONTAINS INFORMATION THAT IS PROPRIETARY TO MOLEX INCORPORATED AND SHOULD NOT BE USED WITHOUT WRITTEN PERMISSION

EC DESCRIPTION
EC NO:
DRWN:
CHK'D:
APPR:
REV

QUALITY SYMBOLS
F = 0
E = 0
D = 0
▼ = 0
C = 0
☒ = 0
■ = 0
B = 0

GENERAL TOLERANCES ISO 2768-2/F (UNLESS SPECIFIED)

Dim.	Tol.
0.5÷3	± 0.05
3÷6	± 0.05
6÷30	± 0.1
30÷120	± 0.15
120÷400	± 0.2
ANGULAR DIMENSIONS	
<10	± 1°
10÷50	± 0°30'
50÷120	± 0°20'
120÷400	± 0°10'

DIMENSION UNITS	MM
SCALE	1:1
DRWN BY	ELONGHI
DATE	13/03/2013
CHK'D BY	AMELZI
DATE	13/03/2013
APPR BY	AMELZI
DATE	13/03/2013
DRAWING SIZE	A3
FIRST ANGLE PROJECTION	

molex

7724.3522.0
S-M series - Frame for hood and housings
Serie S-M - Telaio per custodie fisse e mobili

PRODUCT CUSTOMER DRAWING

SERIES	MATERIAL NUMBER	CUSTOMER
09360	0936010563	SALE DRAWING

DOCUMENT NUMBER	DOC TYPE	DOC PART	SHEET NUMBER
0936010563	PSD	000	1 OF 1