DEGREE CONTROLS, INC.

S-Series Air Flow Switches

User Guide

DEGREE CONTROLS, INCORPORATED
18 Meadowbrook Drive
Milford, New Hampshire 03055 USA

Table of Contents

1 General Information

1.1 Overview

Thank you for your purchase of a DegreeC S-Series Switch, a versatile and rugged, high-performance air velocity switch with both relay and digital communication outputs.

Designed with conformal coated electronics and sealed enclosure, our Switch Products are suitable for demanding applications, including those in corrosive or alkaline environments. With its robust, splash proof design and UV tolerant construction, our Switches are designed to handle a wide range of product and process control air flow applications. Additionally, the Switch series is configured to order, with a variety of velocity ranges, mechanical lengths, and output communication styles available.

The S-Series Switches are manufactured in directional and non-directional styles. Directional Switches only sense flow from one direction, and are immune to flow reversals. Non-directional Switches will sense flow from either direction in the duct or environment. Non-directional Switches are most popular, and enjoy a performance advantage over the directional variant.

1.2 Features

1.2.1 Mechanical Features

- Two available mounting styles: Standard clamp or special gland fitting used for mounting sensor assembly, without need for screws, or hands inside the duct.
- Available in directional (only senses flow from one direction) and non-directional (senses flow from either direction) styles.
- Optimized flow geometry with segregation of velocity and temperature elements for highest accuracy.
- Aerodynamic cross section to minimize flow disturbance.
- Robust, sealed probe assembly uses corrosion and UV resistant materials.
- Printed insertion depth markers and flow direction arrow.
- Conformal coated sensing elements and electronics for environmental protection.
- Plenum-rated cabling suitable for HVAC, laboratory and process control applications.
- RoHS compliant

1.2.2 Electrical & Performance Features

- Up to 5% (non-directional) and 10% (directional) trip point accuracy, with repeatability within ±2%.
- ±1°C temperature accuracy with repeatability within ±1°C.
- Integrated temperature sensor for dual purpose airflow switching.
- User selectable trip point.
- Trip on Velocity and/or Temperature.
- High or low side trip point alarming.
- Best in class acceptance angle performance.
- Wide voltage input options 4.5 – 15 VDC, 19 – 29 VDC, or 22 – 26 V AC/DC.
- <10 second start-up time.

2 Product Specifications

2.1 General Specifications

Operating Temperature	0°C to 60°C (32°F to 140°F)
Storage Temperature	-40°C to 105°C (-40°F - 220°F)
Relative Humidity	5 – 95%
Acceptance Angle	± 30°
Alarm Delay	Configurable 5-256s (5s default)
Recovery Point	**>0.25 m/s**: 15% deviation from trip point **0.15 – 0.25 m/**s: 25% deviation from trip point
Trip Point Accuracy	**Non-directional**: 5% + .05 m/s (10 fpm) from calibrated trip point **Directional**: 10% + .05 m/s (10 fpm) from calibrated trip point
Trip Point Range	**Non-Directional**: 0.15 - 20 m/s (30 – 4,000 fpm) **Directional**: 0.3 - 20 m/s (60 – 4,000 fpm)
Repeatability	± 1% of reading (under identical conditions) – Non-Directional ± 2% of reading (under identical conditions) – Directional
Temperature Accuracy	± 1° (at > 0.5 m/s [100 fpm])
Warm Up Time	< 10 sec
Alarm Output – Relay	Solid State Relay - N.O. or N.C. Contacts Open Without Power 60V Peak (AC/DC); 0.8A Max
Alarm Output – Open Drain	MOSFET Transistor - N.O. or N.C. 40V Peak (DC); 110mA Max
Communications (Optional)	I^2C (400KHz) or 3.3V UART
Cable Length	2 m (6 ft.)
Housing Construction	Polycarbonate (PC), UL94-V0 (head) UL94-HB (housing)
Plenum Rated Cable	22 AWG
Environmental Protection	IP65 electronics, including conformal coated sensing element
Standard Dimension	Selectable lengths **(See Section 2.3, Length)**

Temperature Compensation: The S-Series Switch is a thermal airflow switch; it is sensitive to changes in air density and measures velocity with reference to a set of standard conditions (21°C (70°F), 760mmHg (101.325kPa), and 0%RH). The S-Series Switch has been designed and calibrated to automatically compensate for temperature effects up to 60°C.

2.2 Model Specifications

Degree Controls offers three models of the S-Series Switch. The choice of model depends on the user's voltage range and current requirements, as noted below:

	Input Voltage Range	**Current Consumption**
S300	4.5 – 15 VDC	< 35mA nominal (with Open Drain output) < 70mA nominal (with Relay output)
S400	19 – 29 VDC	< 15mA nominal (with Open Drain output) < 30mA nominal (with Relay output)
S500	22 – 26 VDC/VAC	< 75mA nominal (with Open Drain output) < 125mA nominal (with Relay output)

2.3 Hardware Configuration

Direction	1 = Non-directional (most common) 2 = Directional (for special applications where flow reversal must be ignored)		
Length	**S300** 1 = 152mm [6.0”] max insertion depth = 110 mm [4.3”] 2 = 211mm [8.3”] max insertion depth = 169 mm [6.7”] 3 = 287mm [11.3”] max insertion depth = 245 mm [9.6”]	**S400** 1 = 114mm [4.5”] max insertion depth = 72 mm [2.8”] 2 = 152mm [6.0”] max insertion depth = 110 mm [4.3”] 3 = 211mm [8.3”] max insertion depth = 169 mm [6.7”] 4 = 287mm [11.3”] max insertion depth = 245 mm [9.6”]	**S500** 1 = 183mm [7.2”] max insertion depth = 140 mm [5.5”] 2 = 287mm [11.3”] max insertion depth = 245 mm [9.6”]
Output	1 = Relay 2 = Open Drain		
Polarity	1 = Normally Open (N.O.) 2 = Normally Closed (N.C.)		
Communication*	UART or I^2C		

****Note: For an additional charge, the S-Series Switches can be configured with digital communication, with either UART or I^2C. Call DegreeC for ordering information.***

2.4 Trip Point Configuration

In addition to selecting direction, length, output, and polarity, the S-Series Switches can be configured with a variety of additional features as noted below:

- **Trip Point –** determines the point at which the switch will trip and open/close.
- **Alarm Delay –** defines the amount of time after the trip point has been passed before the alarm is triggered (default is 5 seconds, with a maximum of 256 seconds)
- **Recovery Point** – the point at which the Switch moves out of its alarm state and reverts to normal state (**see section 2.1 General Specifications for more information**).
- **Alarm above or below the trip point (see above for trip point definition) –** Examples below (trip point set to 100 fpm):
    1. **Alarm Above Trip Point**: The Switch will alarm when the velocity is greater than 100 fpm and the alarm delay time has been exceeded. The alarm will clear when the velocity goes below the recovery point of 85 fpm.
    2. **Alarm Below Trip Point (default and most common)**: The Switch will alarm when the velocity is less than 100 fpm and the alarm delay time has been exceeded. The alarm will clear when the velocity goes above the recovery point of 115 fpm.

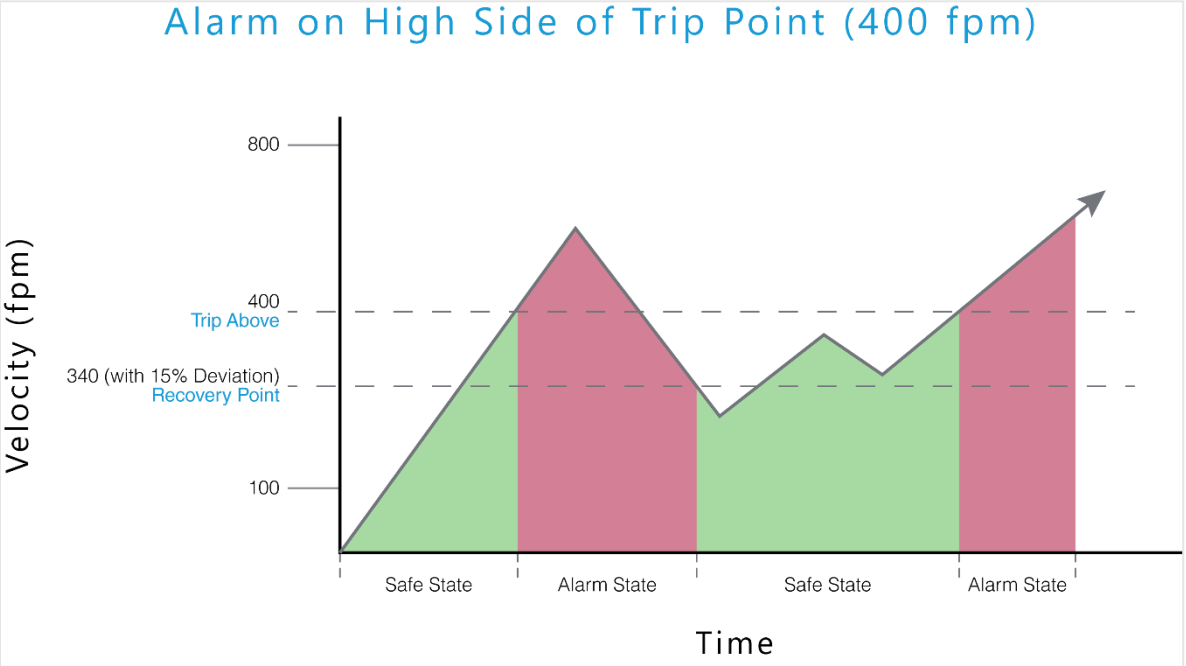

Trip Point Configuration Figure 1: Alarming Above the Trip Point

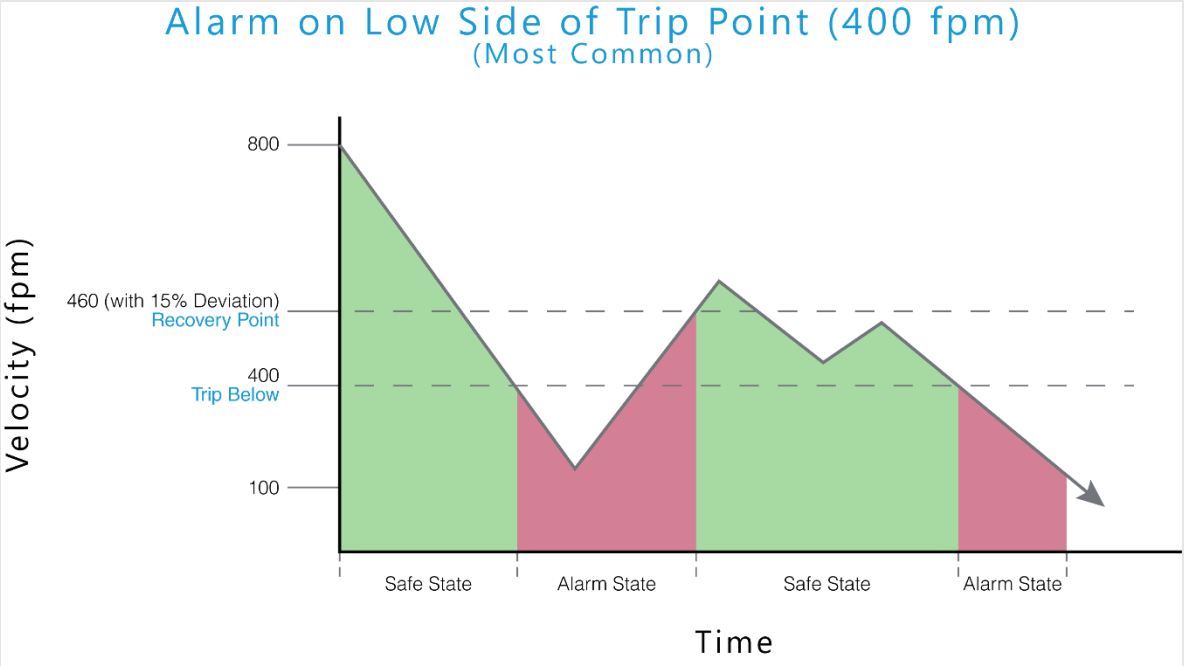

Trip Point Configuration Figure 2: Alarming Below the Trip Point

3 Wiring Information

Depending on the choice of output when configuring the S-Series Switch, wire configurations will differ, as noted below:

3.1 Open Drain Output

Wire Color	Wire Gauge	Description
Black	22 AWG	Power Supply Ground
Red		Power Supply Positive Voltage
White		Open Drain

3.2 Open Drain with RXD/TXD Output

Wire Color	Wire Gauge	Description
Black	22 AWG	Power Supply Ground
Red		Power Supply Positive Voltage
White		Open Drain
Blue		**UART:** TXD is the 3.3V UART Transmit signal **I²C:** SDA is the Bi-Directional Data line
Orange		**UART:** RXD is the 3.3V UART Receive signal **I²C:** SCL is the Clock line

3.3 Solid State Relay Output

Wire Color	Wire Gauge	Description
Black	22 AWG	Power Supply Ground
Red		Power Supply Positive Voltage
Green		Relay Pin 1
White		Relay Pin 2

3.4 Solid State Relay with RXD/TXD Output

Wire Color	Wire Gauge	Description
Black	22 AWG	Power Supply Ground
Red		Power Supply Positive Voltage
Green		Relay Pin 1
White		Relay Pin 2
Blue		**UART:** TXD is the 3.3V UART Transmit signal **I²C:** SDA is the Bi-Directional Data line
Orange		**UART:** RXD is the 3.3V UART Receive signal **I²C:** SCL is the Clock line

Notes:

1. For I²C communication, external pull-up resistors to +3.3V for SDA and SCL are required.
   The S-Series Switch does not have internal pull-up resistors. I²C Maximum Clock Frequency is 400 KHz.
2. For RS232 communication, an external level shifter is required to convert 3.3V TTL to RS232 voltage levels.
   The S-Series Switch's RX and TX signals are 3.3V TTL.

3.5 Wiring Diagrams

3.5.1 Open Drain Style Output

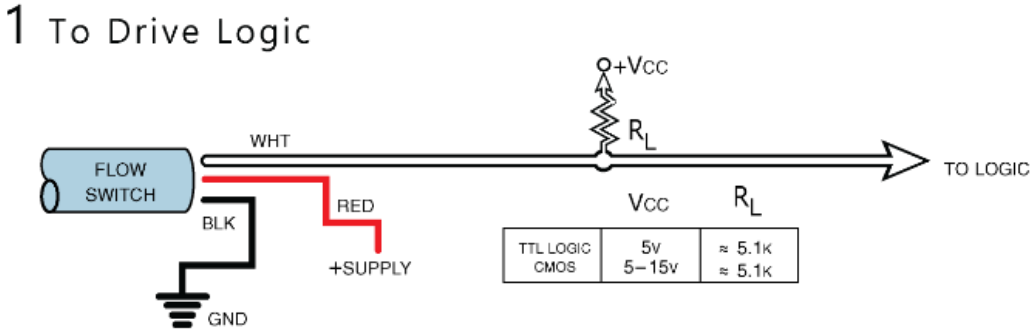

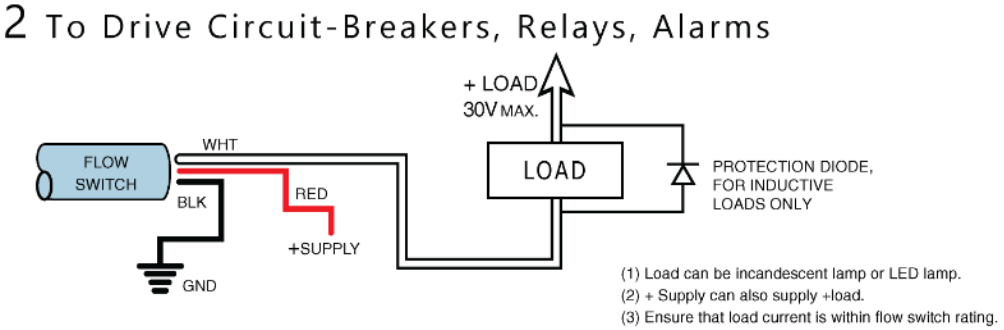

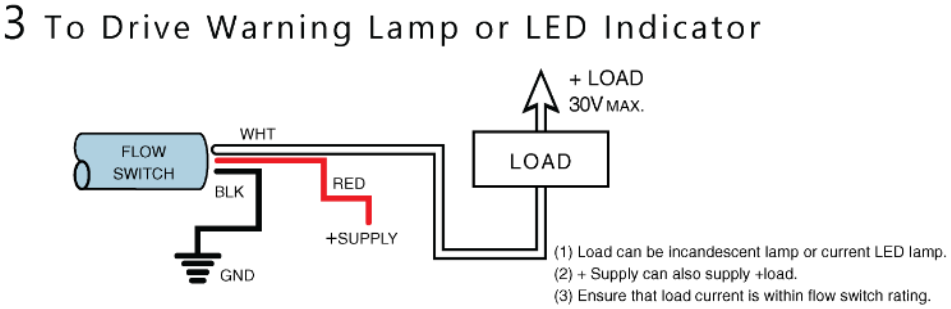

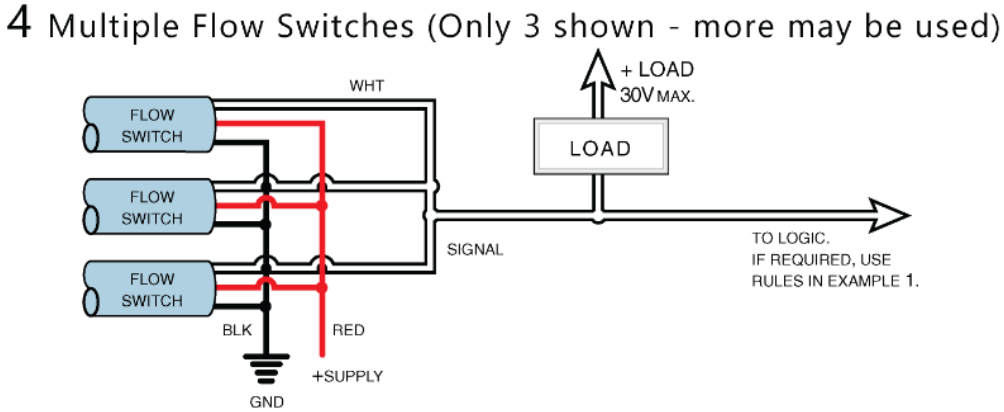

3.5.2 Solid State Relay Style Ouput

3.5.2.1 Isolated Grounds

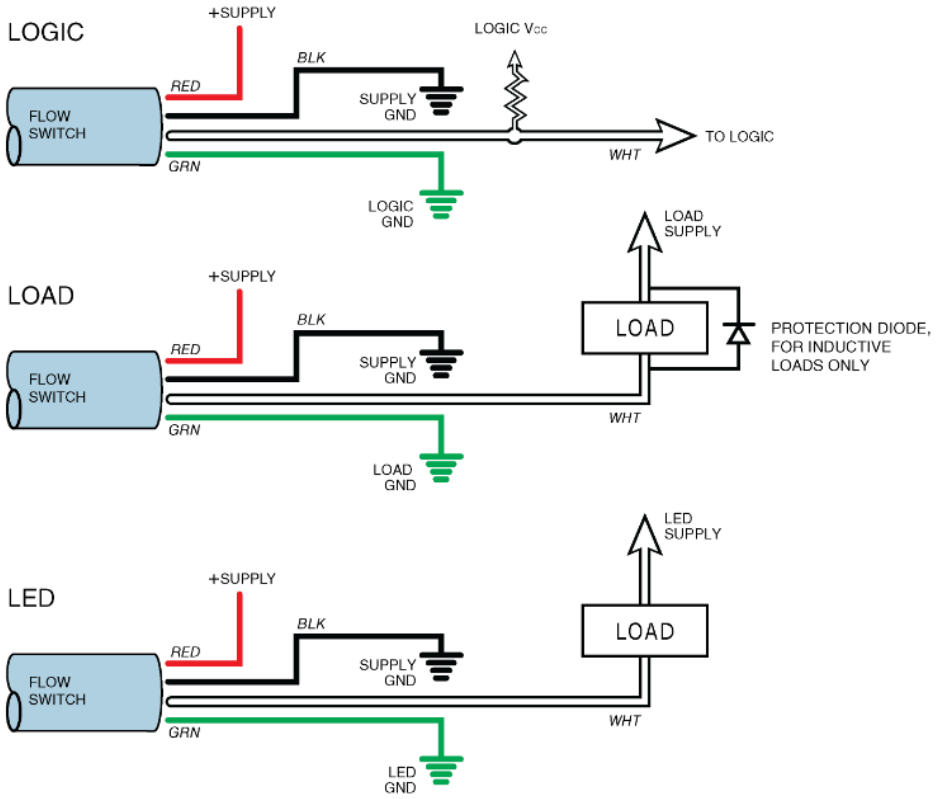

3.5.2.2 Non-Isolated Grounds

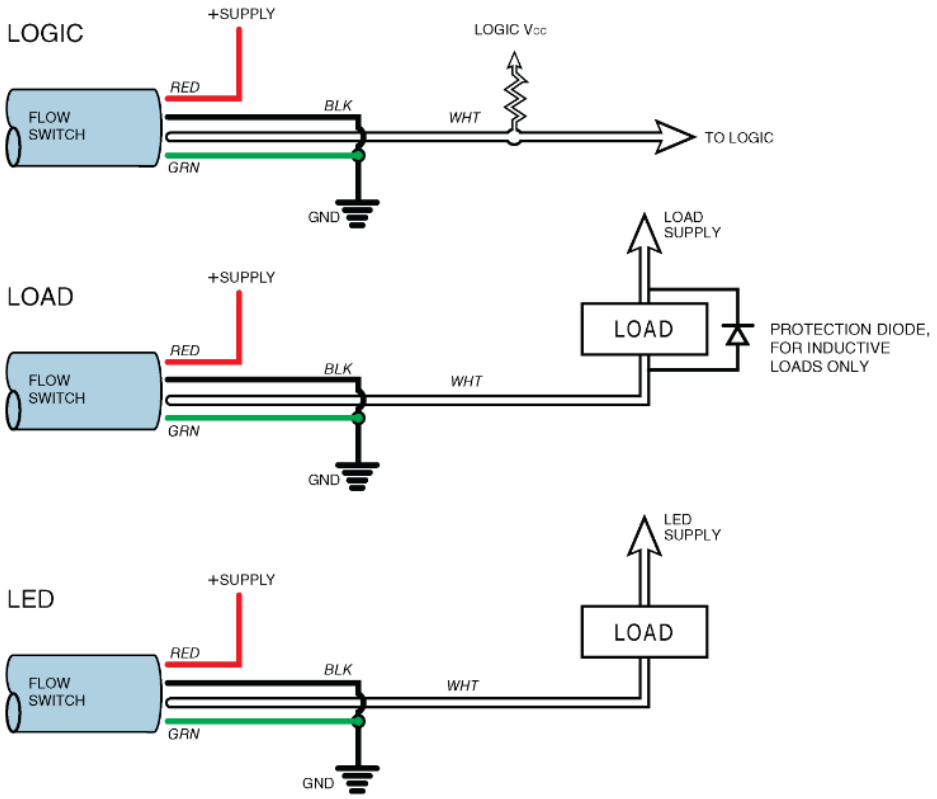

3.5.2.3 Multiple Isolated Grounds

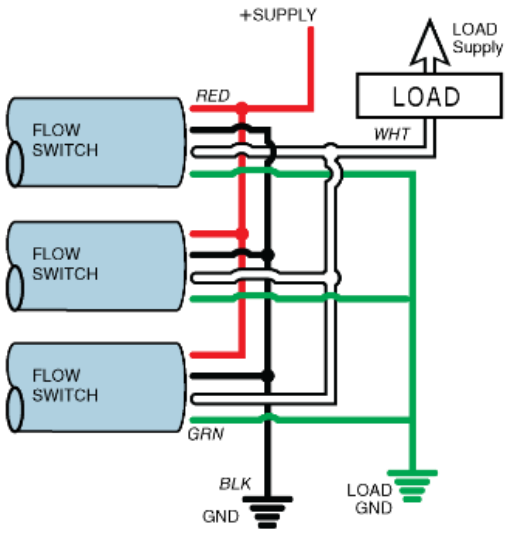

3.5.2.4 Multiple Non-Isolated Grounds

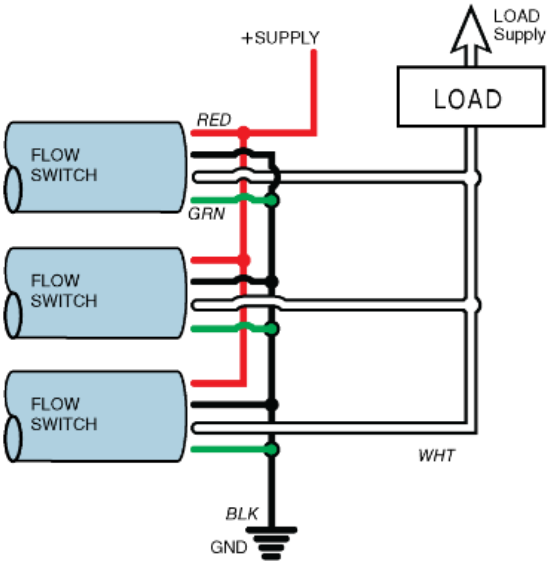

4 Mechanical Information

4.1 Switch Head Mechanical Drawings

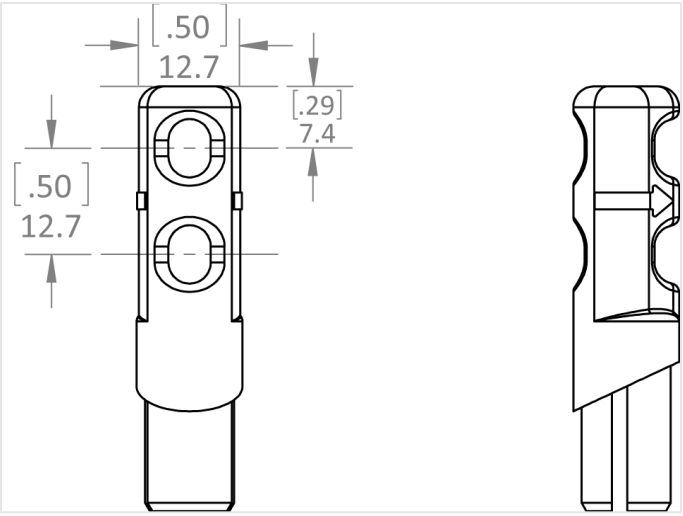

Mechanical Figure 1: S-Series Switch Head (Non-Directional)

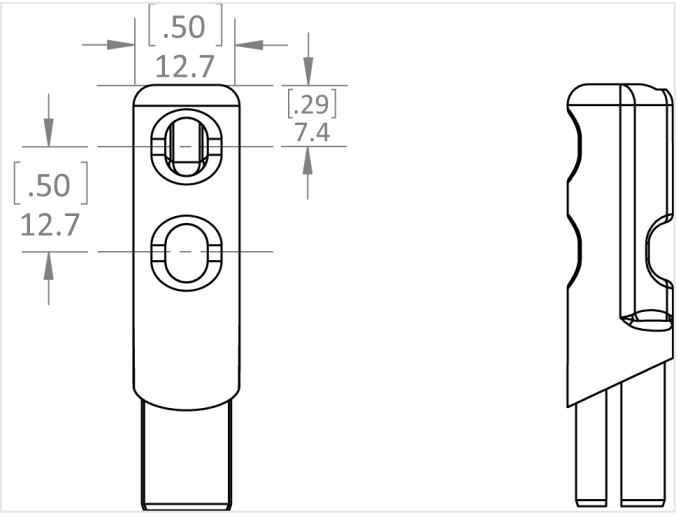

Mechanical Figure 2: S-Series Switch Head (Directional)

4.2 °C Clamp Mechanical Drawing

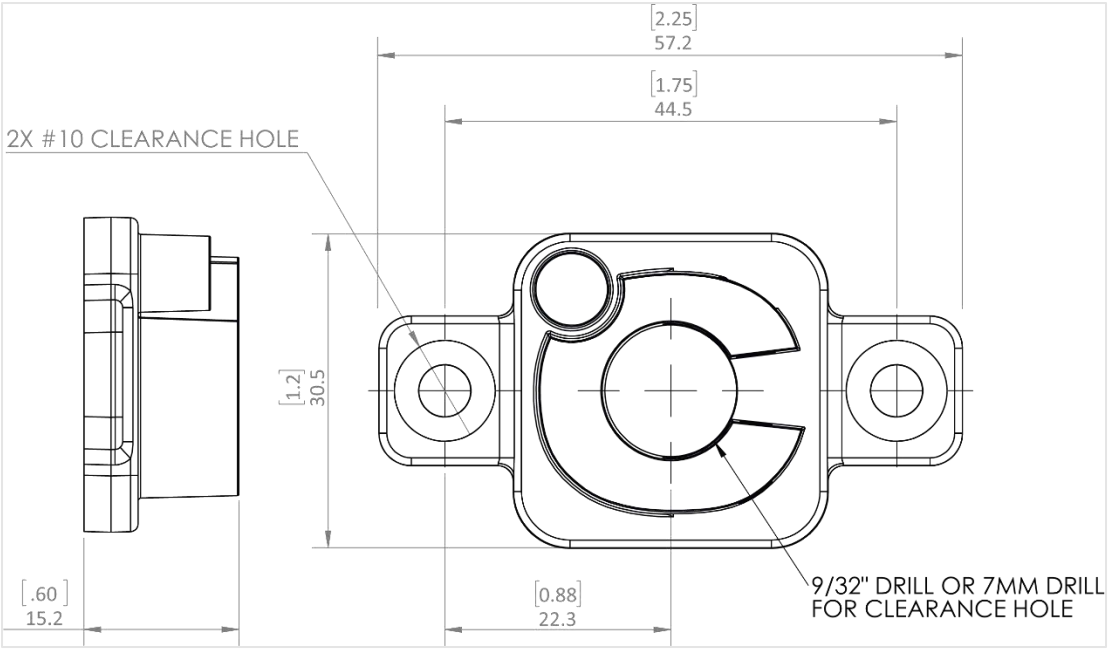

Mechanical Figure 3: °C Clamp

5 Mounting and Positioning

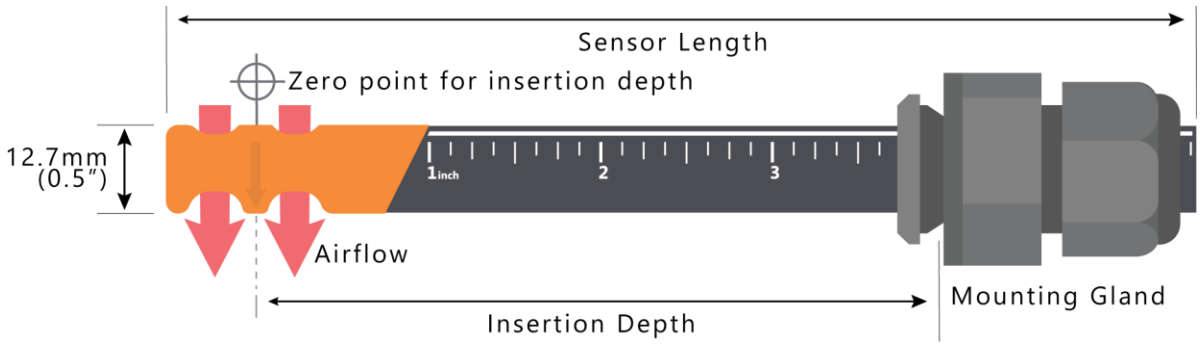

Mounting Figure 1: Switch Dimensions (Non-Directional Head shown)

Note: Two sensor lengths are available to accommodate insertion depths of 61mm [1.25"] to 245mm [9.6"]. See **Mounting Figure 1** above for insertion "zero point" datum.

The S-Series Switch utilizes either a °C Clamp or Gland fitting for installation. Please follow the below instructions for optimal installation:

5.1 Gland Installation

1. Drill a 13/16" (20mm) hole into the surface you wish to install the Sensor into.
    - Follow the below instructions to install the Sensor via Gland Fitting.
2. Adjust the Sensor's insertion depth (use the printed ruler on the Sensor's body for reference) and tighten the gland nut onto the Sensor body (**"A" in Figure 2 below**).
3. Insert the Sensor into the drilled hole wider flange first (**"B" in Figure 2 below**), then rotate into position, ensuring that the airflow indicators (arrows on the orange head; **see Figure 4 below**) are facing the correct direction.
4. Tighten the mounting nut (**"C" in Figure 2 below**) in the left-hand direction.

S-Series Switch with Gland Fitting

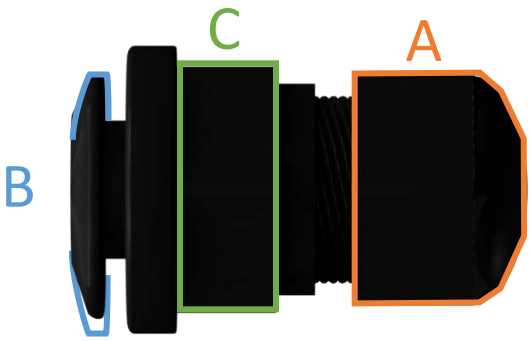

Side View

Front View

Mounting Figure 2: Gland Nut

5.2 °C Clamp Installation

1. Mark the sensor hole, and screw positions, per Step 1 of **Figure 4, below.**
2. Drill a 17/32” (14mm) hole through the surface you wish to install the Sensor.
3. Drill two pilot holes for the °C Clamp fastening screws.
4. Secure the °C Clamp with two screws.(not provided)
5. Insert the Sensor into the °C Clamp and adjust the Sensor’s insertion depth (use the printed ruler on the Sensor’s body for reference), ensuring that the airflow indicators (arrows on the blue or orange head**; see section 5.3 Airflow Direction**) are facing in the intended direction.
6. Using the provided screw, tighten and cinch the sensor into place.
7.

S-Series Switch with °C Clamp Fitting

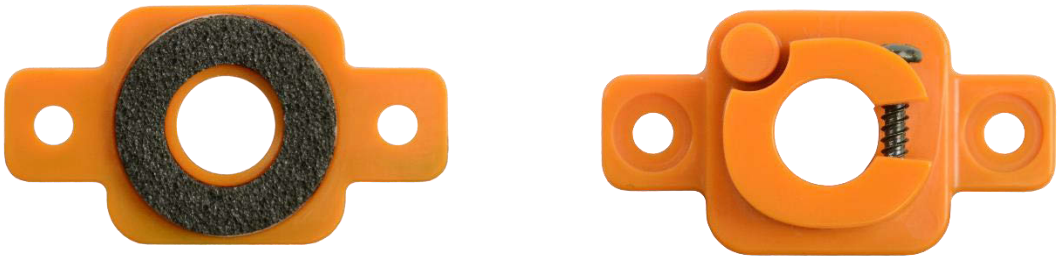

Back View Front View

Mounting Figure 3: °C Clamp

Step 1 Step 2

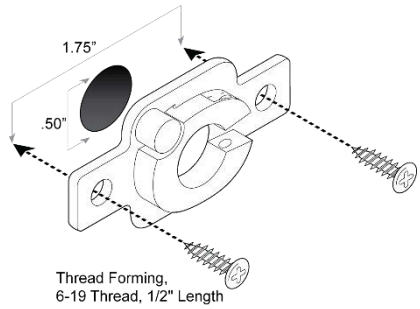

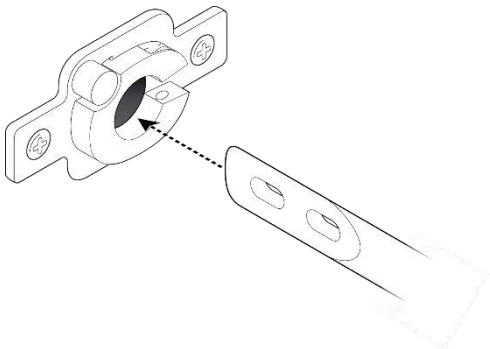

Step 3

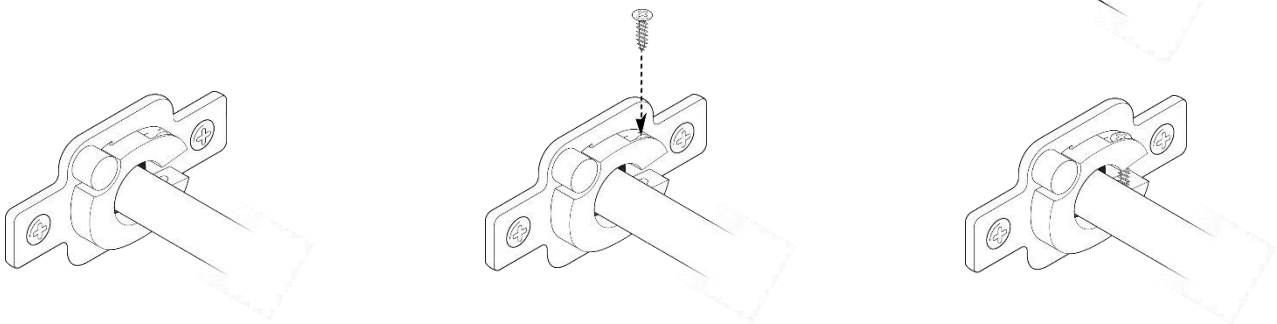

Mounting Figure 4: °C Clamp Installation

5.3 Airflow Direction

To ensure that the Switch actuates within its published specifications, proper mounting precautions must be followed:

- The main airflow cavity that surrounds the flow thermistor must be orientated perpendicular to the airflow being monitored.
- When monitoring air velocity within a pipe or duct, mount the sensor so that the main flow cavity is in the center of the pipe or duct. Avoid mounting the sensor in turbulent locations caused by elbows, duct size changes, etc. If airflow turbulence causes excessive airflow reading variation, increasing the *Sample Time (index 63)* may solve the problem.

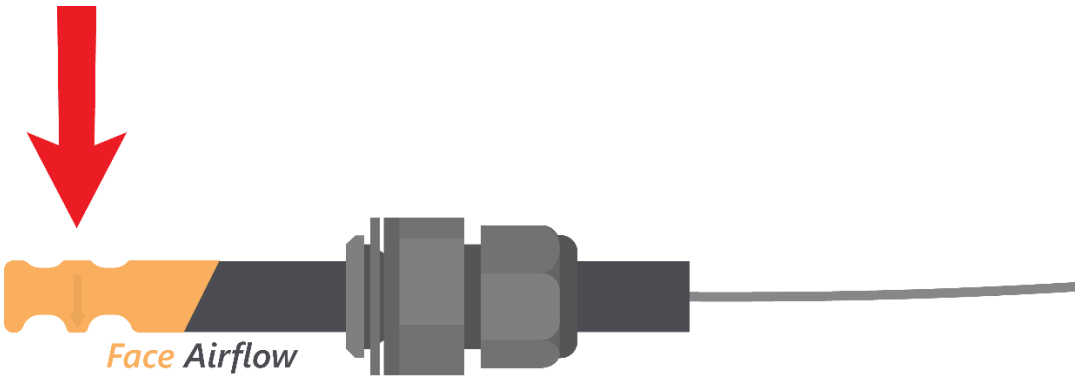

Airflow Figure 1: Direction of Airflow (Non-Directional)

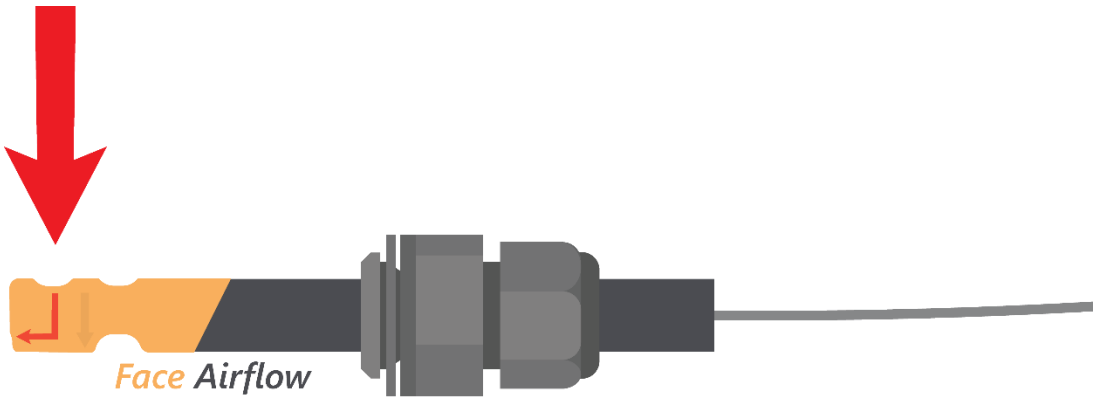

Airflow Figure 2: Direction of Airflow (Directional)

6 Communication

The S-Series Switches support two methods of communication: UART and I^2C. The choice of communication is set up at DegreeC prior to shipment.

6.1 UART

The communication protocol described below is for communication between a master host and the slave Switch product. This protocol is used to read/write configuration variables and to read process variables from the Switch.

- The host can configure the Switch by transmitting a “Memory Write” command which contains the memory index and the new data within the command.
- The host reads configuration variables using the “Memory Read” command.
- For multi-byte configuration variables, the data format is “little endian”. The lowest address is the least significant byte.

Four process system variables (Velocity, Tamb, Power, and Raw Velocity) can also be read from the Switch using the “Read Velocity”, “Read Tamb”, “Read Power”, and “Read Raw Velocity” commands, as noted below:

Byte	**1**	**2**	**3**	**4**	**1**	**2**	**3**	**4**
Read Velocity	1	0	0	checksum	Velocity (Hi)	Velocity (Lo)	0	checksum
Read Tamb	2	0	0	checksum	Tamb (Hi)	Tamb (Lo)	0	checksum
Read Power	3	0	0	checksum	Power (Hi)	Power (Lo)	0	checksum
Memory Write	6	Memory Index	Data	checksum	Memory Index	Data	0	checksum
Memory Read	7	Memory Index	0	checksum	Memory Index	Data	0	checksum
Read Raw Velocity	9	0	0	checksum	Velocity Raw (Hi)	Velocity Raw (Lo)	0	checksum
RESET	12	0	0	checksum	n/a	n/a	n/a	n/a

UART Figure 1: Process System Variables

6.1.1 Hardware

The Switch’s UART RX and TX signals are digital signals from the internal processor’s UART. To convert to true RS232 signals, an external level shifter is required.

6.1.2 Configuration

UART configuration is fixed at 19200 baud rate, 8 data bits, no parity, 1 stop bit.

Protocol

The switch is a slave device and supports several different commands. Both transmission and reply command message lengths are four bytes. The fourth byte is a checksum byte to verify message integrity. The checksum byte is determined by performing an “exclusive or” logic operation of the first three bytes. The tables below define the seven host commands supported and the appropriate switch reply.

Password Protection

Setpoints designated as (RWP) in the Memory Map require two consecutive Memory Write commands to change the setpoint.

- Command #1: Memory Write 0xAA to the Password (index 83).
- Command #2: Memory Write the new value to the password protected register. If valid, Switch will accept the commands and write the new value. The Password (index 83) is automatically reset to 0xFF, the protected default state.

Caution:

- If the switch receives a message with an invalid command byte or an invalid checksum, the message will be discarded and the Switch will not reply.
- If the switch receives a partial message, the message will be discarded and the Switch will not reply.
- The host should use the "Read Velocity", "Read Tamb", "Read Power", and "Read Raw Velocity" commands to read these double byte variables.
- When reading the double byte process variables Velocity (index 67), Raw Velocity (index 69), T Ambient Temperature (index 71), T Flow Temperature (index 73), Power Average (index 75), using the single byte "Memory Read" command, read the Low Byte first, then read the High Byte. This prevents a "byte mismatch" reading error.

6.2 I²C

The communication protocol described below is for communication between the I²C master host and the I²C slave Switch. This protocol is used to read/write configuration variables and to read process variables from the Switch. Reading and writing to the Switch uses the same protocol that is commonly used to read and write to EEPROM's.
For multi-byte configuration and process variables, the data format is "little-endian", the low order byte of the number is stored in memory at the lower address.

6.2.1 Configuration

The protocol sequence is as follows:

- Each switch starts out with a default Address of 192. This address may be changed to an arbitrary 8-bit value by writing to the switch's I²C address register and cycling power.
- The I²C commands for the switches are defined as per the following tables:

1	**7**	**1**	**1**	**8**	**1**	**8**	**1**	**1**
S	Slave Address	Wr	A	Sub Address	A	Data Byte	A	P

S	=	Start bit
Slave Address	=	Switch Address
Wr	=	0
A	=	Acknowledge from the Switch
Sub Address	=	Index into the Switch's Memory Map
Data Byte	=	Data written to the switch at the Sub Address
P	=	Stop bit

I²C Figure 1: Write Byte

1	7	1	1	8	1	1	8	1	1	8	1	1
S	Slave Address	Wr	A	Sub Address	A	S	Slave Address	Rd	A	Data Byte	A	P

S	=	Start bit
Slave Address	=	Switch Address
Wr	=	0
Rd	=	1
A shaded	=	Acknowledge from the switch (0 to indicate Ack)
Sub Address	=	Index into the switch Memory Map
Data Byte	=	Data from the switch at the Sub Address
A non-shaded	=	Acknowledge from the Host (1 to indicate end of read cycle)
P	=	Stop bit

I²C Figure 2: Write Byte

1	7	1	1	8	1	1	8	1	1	8	1
S	Slave Address	Wr	A	Sub Address	A	S	Slave Address	Rd	A	Data Lo Byte	A1	...

8	1	1	
...	Data Hi Byte	A2	P

S	=	Start bit
Slave Address	=	switch Address
Wr	=	0
Rd	=	1
A shaded	=	Acknowledge from the Switch (0 to indicate Ack)
Sub Address	=	Index into the Switch Memory Map
Data Byte	=	Data from the switch at the Sub Address
A1 non-shaded	=	Acknowledge from the Host (0 to indicate read cycle continues)
A2 non-shaded	=	Acknowledge from the Host (1 to indicate end of read cycle)
P	= Stop bit	

I²C Figure 3: Read Byte

Caution:
If there is a communication failure in the midst of a read/write sequence, it is NECESSARY to issue a "Stop" bit before resuming communication with a new "Start" bit.

I²C Command Restrictions

- The write cycle only supports a single byte write cycle. Multiple byte write cycles are not supported.
- The read cycle supports a single and a double byte read cycle. Read cycles (greater than two) are not supported.

I²C Address

The switch supports a 7-bit address which is shifted left to become the 7 most significant bits of the Slave Address Byte. The default value (after shifting) is 0xC0 (19210) for write operations and 0xC1 (19310) for read operations. This base address is password protected and can be changed by performing a "Write Byte" command to I²C Base Device Address (index 0) with the new base address. The new base address will become active after the next power cycle.

Password Protection

Setpoints designated as (RWP) in the Memory Map require two consecutive I^2C write commands to change the setpoint.

- Command #1: Write 0xAA to the Password (index 83).
- Command #2: Write the new value to the password protected register. If valid, the Switch will accept the commands and write the new value. The Password (index 83) is automatically reset to 0xFF, the protected default state.

7 Sensor Registers

The sensor setpoints and process parameters can be accessed by reading and writing into the memory map using the appropriate serial communications interface. The table below provides specific details for these parameters:

7.1 Memory Map

Index		Type	Size	Name/Description	Default
Dec	Hex				
0	0x00	RWP	1	**I^2C Base Device Address:** (used in I^2C Communication Mode Only).	0xC0
1	0x01	RO	1	**Communication Mode:** 5=UART 6=I^2C	per Model P/N
2	0x02	RW	1	**Alarm Mode:** (bit mapped) bit 0: Enable VELOCITY_LOW_ALARM bit 1: Enable VELOCITY_HIGH_ALARM bit 2: Illegal bit 3: Illegal bit 4: Enable TEMPERATURE_LOW_ALARM bit 5: Enable TEMPERATURE_HIGH_ALARM bit 6: Illegal bit 7: Illegal Note: Only High or Low alarm can be set. Trying to set both disables alarm Alarms can be set for Velocity and Temperature Simultaneously	0
3	0x03	RW	2	**Velocity Alarm Low Setpoint:** Alarm Mode dependent … VELOCITY - Low Alarm Setpoint, (mm/s)	0
5	0x05	RW	2	**Velocity Alarm High Setpoint:** Alarm Mode dependent … VELOCITY - High Alarm Setpoint, (mm/s)	0
7	0x07	RW	1	**Power Up Alarm Delay Setpoint:** 0=DISABLE, (secs) At power-up the alarm timer is set to the Alarm Delay Setpoint and starts counting down to zero. While timing the alarm is set to the inactive state. At time-out, the alarm is serviced normally.	10
8	0x08	RW	1	**Alarm Trip Time:** The Alarm Trip Time parameter sets the number of consecutive seconds of velocity/temperature readings below the low threshold or above the high threshold to cause an alarm state change. Example: For an alarm condition compare of 5 seconds, set Alarm Trip Time to 5.	5
9	0x09	RW	1	**Relay State on Alarm:** Used to set the Alarm SSR state when the Alarm is active 0 = Alarm SSR is **Closed** when **in alarm** N.O. 1 = Alarm SSR is **Open** when **in alarm** N.C.	0

10	0x0A	RW	1	**Smart Averaging:** (bit mapped) bit 0 –> bit 6: not used bit 7: 0=Smart Averaging set to OFF 1=Smart Averaging set to ON	0
11	0x0B	RO	1	**Calibrated** (0=UNCALIBRATED, 1=CALIBRATED)	1
12	0x0C	RO	4	**Unique ID:**	ID Data
16	0x10	RO	4	**Model Type:**	ID Data
20	0x14	RO	4	**Year Week:**	ID Data
24	0x18	RO	6	**Work Order:**	ID Data
30	0x1E	RO	4	**Serial Number:**	ID Data
34	0x22	RO	1	**Device Address:** Used for UART multi-drop systems	CAL Data
35	0x23	RO	1	Reserved	
37	0x24	RO	2	Reserved	
38	0x26	RO	2	**Power LowA :** Power Measured at Zero Velocity	CAL Data
40	0x28	RO	2	**Power LowB:** Power From Calibration Table	CAL Data
42	0x2A	RW	2	**Temperature Alarm Low Setpoint:** Alarm Mode dependent … TEMPERATURE – Low Alarm Setpoint, (°C * 100)Reserved	0
44	0x2A	RW	2	**Temperature Alarm High Setpoint:** Alarm Mode dependent … TEMPERATURE – Low Alarm Setpoint, (°C * 100)Reserved	0
46	0x2E	RO	1	**Tamb Velocity Low Offset:** Used to calculate Tamb, (sbbb.bbbb)	CAL Data
47	0x2F	RO	1	**Tamb Velocity High Offset:** Used to calculate Tamb, (sbbb.bbbb)	CAL Data
48	0x30	RO	1	**VDrive Control:** DAC Output to regulate the internal VCC power	CAL Data
49	0x31	RO	1	**Configuration Debug Flag:** (bit mapped) bit 0: 0=PV 69 used for Velocity_Raw (mmps) 1=PV 69 used for VFlowHi (mv) bit 1 -> bit 7: not used	
50	0x32	RO	2	**Velocity Low Range:** From Model P/N, (mm/sec)	CAL Data
52	0x34	RO	2	**Velocity High Range:** From Model P/N, also used to determine V output, (mm/sec)	CAL Data
54	0x36	RO	1	**K Factor:** For Velocity Temperature Compensation	CAL Data
55	0x37	RO	1	**PGAIN:** Proportional Band (°C)	CAL Data
56	0x38	RO	1	**IGAIN:** Integral Gain (Repeats per Minute)	CAL Data
57	0x39	RO	1	**Calibration Temperature:** For Velocity Temperature Compensation (°C)	CAL Data
58	0x40	RO	1	**Offset Temperature:** ΔT from Tamb to Tflow, (°C)	CAL Data
59	0x3B	RW	2	Reserved	N/A
61	0x3D	RW	2	Reserved	N/A

63	0x3F	RW	1	**Sample Time:** Determines the sample time (sec) used to calculate the rolling average velocity. Value range is (0 to10), results in sample times (0.4 sec to 10.0 sec). Examples: 0=.4 sec, 1=1.0 sec, 2=2.0 sec, 3=3.0 sec, 5=5.0 sec, 10=10.0 sec.	3
64	0x40	RO	2	**Firmware Version:**	140
66	0x42	RO	1	**Status:** (bit mapped) bit 0: not used bit 1: Flow bead Control Error bit 2: not used bit 3: Ambient Temperature Sensor Error bit 4: Air Flow Temperature Sensor Error bit 5: not used bit 6: not used bit 7: not used	N/A
67	0x43	RO	2	**Velocity:** Velocity measured over the sample time period, (mm/s)	N/A
69	0x45	RO	2	**Velocity Raw or VFlowHi:** Value determined by **Configuration Debug Flag** (bit 0) bit 0=0: Velocity, raw value, updated every 400 msec, (mm/s) bit 0=1: VFlowHi is reported, (mv)	N/A
71	0x47	RO	2	**T Ambient Average:** Temperature measured from the last conversion cycle, (°C * 100) Example: A temperature of 31.2°C would be represented as 3120	N/A
73	0x49	RO	2	**T Flow Temperature:** Temperature of the flow thermistor, (°C * 100)	N/A
75	0x4B	RO	2	**Power Average:** Calculated power to maintain Tflow setpoint, (mw * 100) Example: A power value 28.62 mw would be represented as 2862	N/A
77	0x4D	RO	2	Reserved	N/A
79	0x4F	RO	2	Reserved	N/A
81	0x51	RO	1	**Alarm Status:** (bit mapped) bit 0: VELOCITY_LOW_ALARM bit 1: VELOCITY_HIGH_ALARM bit 2: not used bit 3: not used bit 4: TEMPERATURE_LOW_ALARM bit 5: TEMPERATURE_HIGH_ALARM bit 6: not used bit 7: not used Alarms can be valid for Velocity and Temperature Simultaneously if enabled	N/A

82	0x52	RO	1	**Alarm Output:** -Reflects the state of the Alarm SSR 0=Alarm SSR OFF Open 1=Alarm SSR ON Closesd	N/A
83	0x53	RW	1	**Password:** To write to RWP type items, this Password register must first be set to 0xAA. Then a second write command can write to the RWP item. Password is automatically reset to 0xFF after any command accessing index 0 thru 82.	0xFF

8 Degree Controls Inc. Product Warranty

For a period of one (1) year following the date of delivery, and subject to the other provisions of this Warranty Section, DegreeC warrants that all new products that are both (a) manufactured by DegreeC and (b) purchased directly from DegreeC (or an authorized distributor of DegreeC) shall be free of material defects in materials and workmanship. Buyer's sole and exclusive remedy, and DegreeC's sole and exclusive obligation, in the event of any product defect shall be for DegreeC to, at its option, repair or replace such products free of charge. In no event shall DegreeC be liable for ordinary wear and tear. In order to get the benefit of the foregoing warranty, Buyer must examine the delivered products immediately upon receipt thereof and report to DegreeC, in writing, any visible defects within ten (10) working days of such receipt. Buyer's failure to report defects within the foregoing time period will be deemed an unqualified waiver of any and all of Buyer's rights to warranty claims. DegreeC does not provide any warranty for third party parts, components, or products that are not manufactured by DegreeC. Such parts, components, or products may be warranted by third parties on a "pass through" basis. The foregoing remedies shall not apply to any product failure caused in whole or in part by (i) Buyer's failure to operate, maintain, or service the products in accordance with DegreeC's documentation, (ii) any alteration, modification, or repair made to the products other than by DegreeC, or (iii) use of the products for a purpose other than that for which it is intended. THE FOREGOING EXPRESS WARRANTY extends only to the original customer of Degreec or DegreeC's authorized distributor, as the case may be**.** THE CORRECTION OF ANY DEFECT IN, OR FAILURE OF, PRODUCTS BY REPAIR OR REPLACEMENT IN ACCORDANCE WITH DEGREEC'S POLICIES DESCRIBED HEREIN SHALL BE DEGREEC'S SOLE AND EXCLUSIVE OBLIGATION AND THE SOLE AND EXCLUSIVE REMEDY OF BUYER FOR ANY AND ALL LOSSES, DELAYS OR DAMAGES RESULTING FROM THE PURCHASE OR USE OF DEGREEC'S PRODUCTS. OTHER THAN THE LIMITED WARRANTY SPECIFICALLY STATED HEREIN, DEGREEC SPECIFICALLY DISCLAIMS ANY AND ALL OTHER WARRANTIES WITH RESPECT TO DEGREEC'S PRODUCTS, INCLUDING THE PERFORMANCE THEREOF AND ANY SERVICES PROVIDED TO BUYER, EITHER EXPRESS OR IMPLIED, INCLUDING, WITHOUT LIMITATION, ANY WARRANTY ARISING FROM A COURSE OF DEALING OR USAGE OF TRADE, NON-INFRINGEMENT AND ANY IMPLIED WARRANTIES OF MERCHANTABILITY AND FITNESS FOR A PARTICULAR PURPOSE OR USE.