hansgrohe

Soap Dispenser, Contemporary
Product Finish: **chrome** Part no. : **04539000**

Description

Features

- Durable metal construction
- Bottle capacity 16 oz
- 1⅜” maximum counter depth

Item details

List Price	$ 88.00

Product image
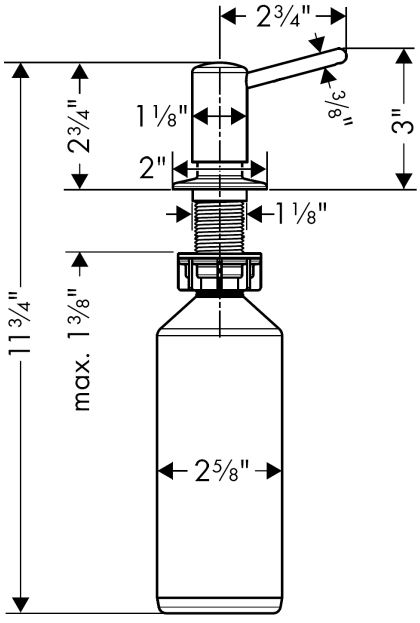
Scale drawing