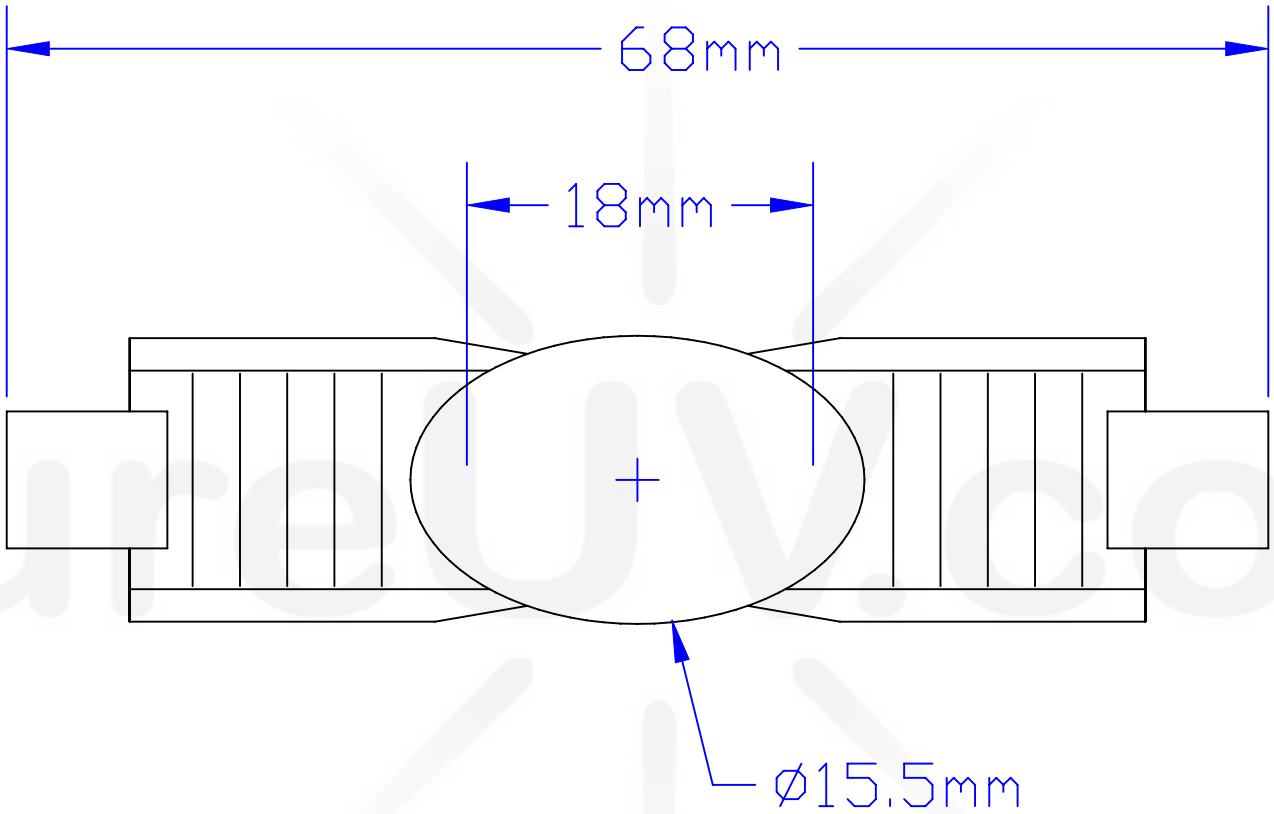


This document is the property of cureUV.com. It is not for publication and is issued in strict confidence and on condition that it is not copied, reprinted or disclosed to a third party either wholly or in part without the written consent of cureUV.com. Possession of this document does not authorize the holder to manufacture/duplicate the article it describes/ specifies without the consent in writing of the cureUV.com. This document is to be returned on demand.

cureUV.com

ITEM TYPE.: UV CURING LAMP

ITEM SKU NO.: 191139