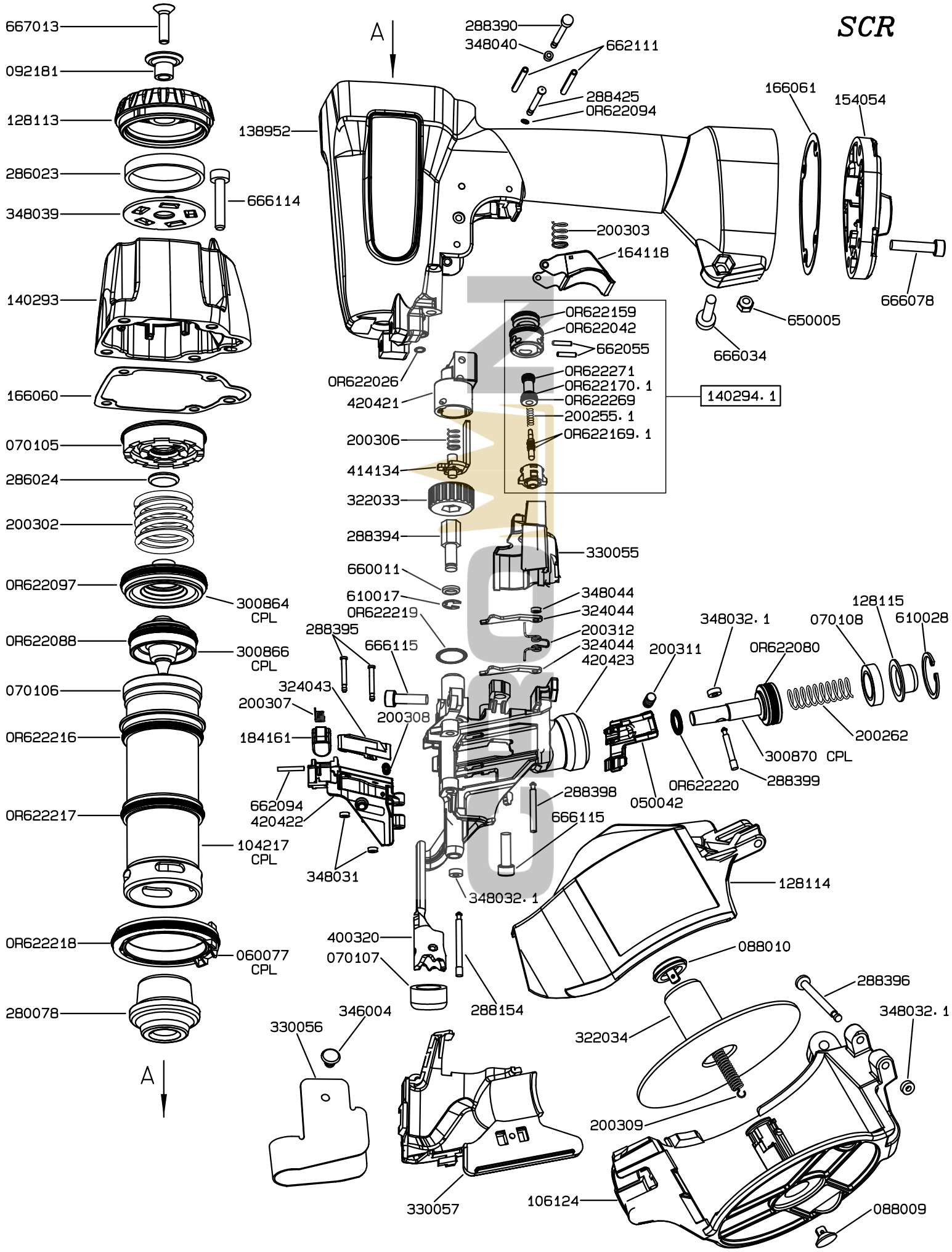ESP	MACHINE CODE	MACHINE CODE	MACHINE CODE	MACHINE CODE
4	11350.01			
DESC.	F33 CN15W-PS50