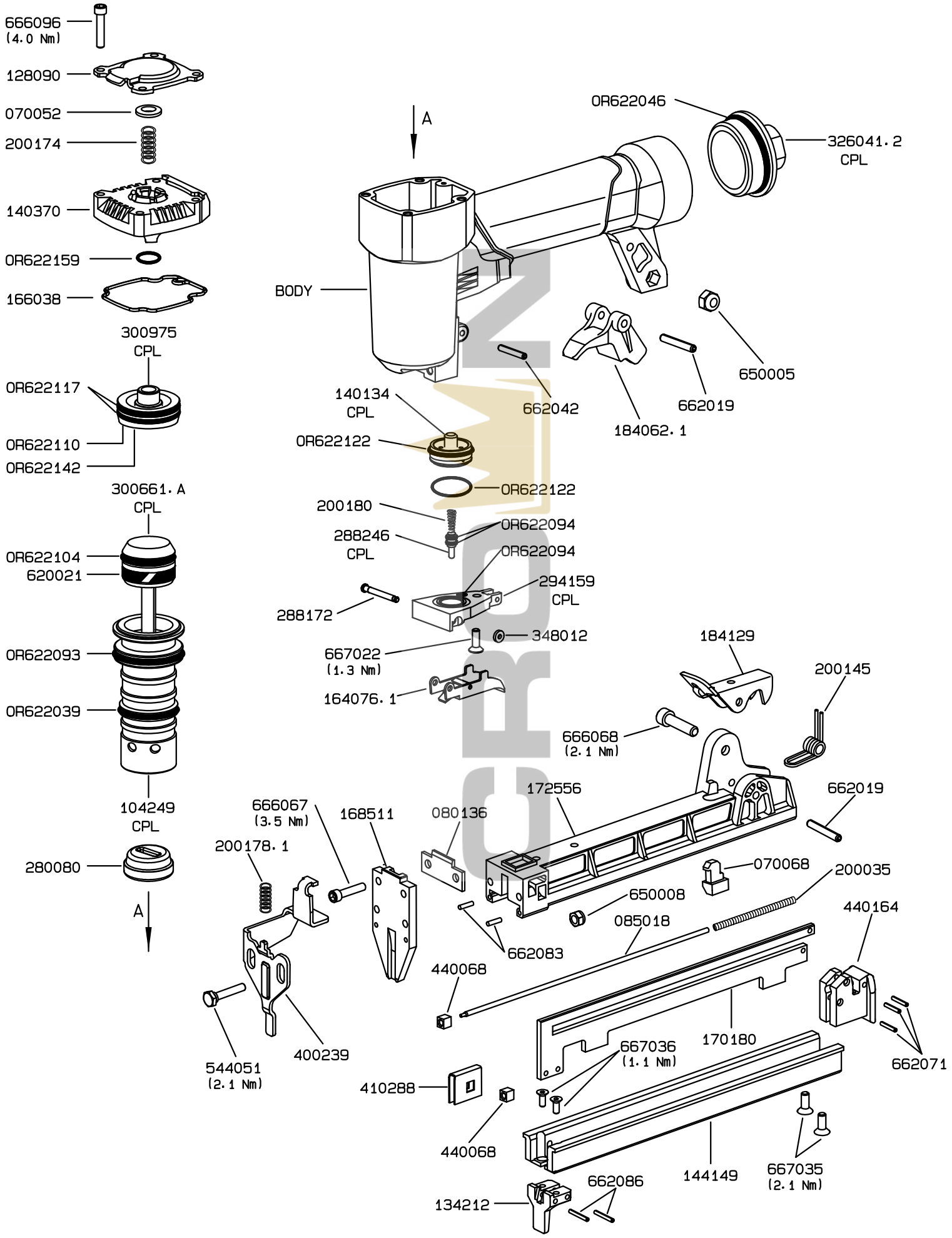ESP	MACHINE CODE	MACHINE CODE	MACHINE CODE	MACHINE CODE	MACHINE CODE
5	11368.A	21368.A	31368.A		
DESC.	F21P 4000-25A	R21P 4000-25A	H21P 4000-25A		
BODY	138638	138679	138690