VersaStep

Recumbent Ipsilateral Cross Trainer

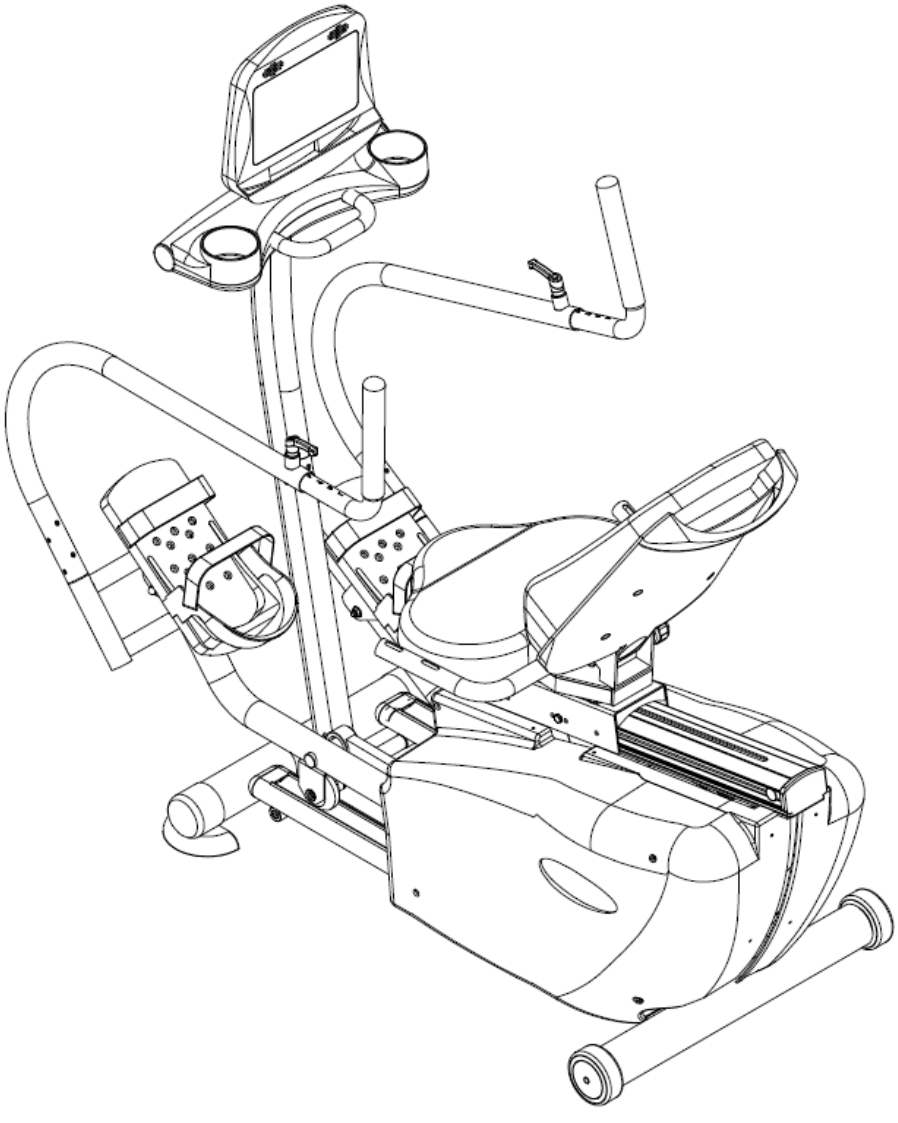

HealthCare International, Inc.
PO Box 1509, Langley, WA 98260
www.HCIFitness.com – sales@hcifitness.com
P: 206-739-5400

Table of Contents

Safety Precautions 2
Warranty Information 3
Assembly Instructions 4
Quick Tips 7
Levelers 7
Seat Adjustments 7
Quick Start 7
Heart Rate 7
USB Workout Summary Report 7
VersaStep Display Console 8
Button Functions 9
Quick Start –Sit, Start, & Step! 10
Select a Workout Program 10
Setup your Workout Programs 11
User Setup 11
1. Basic Programs 12
2. Heart Rate Programs (HR 65% / HR 85%) 13
3. Constant Programs (SPM / WATTS) 14
4. Goal Set Programs (Calories / Distance) 15
Cool Down Mode 16
Workout Summary Mode 17
Export Workout Summary to USB 17
Sleep Mode 18
Recovery Mode 19
Using Optional Heart Rate Monitors 19
General Maintenance 20
General Display Information 21
Display Settings – Engineering Mode 22
Exploded Diagram 23
Parts List 24

Safety Precautions

This exercise equipment was designed and built for optimum safety. However, certain precautions apply whenever you operate a piece of exercise equipment. Be sure to read the entire manual before assembly and operation of this machine.

Also, please note the following **safety precautions:**

1. Read all instructions carefully before using the machine.
2. Consult your physician or other health care professional before beginning this or any type of exercise program.
3. Always wear proper exercise apparel when using the machine.
4. If at any time you feel faint, light-headed or dizzy while operating the machine, stop exercise immediately. You should also stop exercising if you are experiencing pain or pressure.
5. Keep children and pets away from the machine while in use.
6. Only one person can use the machine at a time.
7. Make sure your machine is correctly assembled before you use it. Be sure all screws, nuts, and bolts are tightened prior to use and retighten periodically.
8. Do not operate this or any exercise equipment if it is damaged.
9. Keep hands and feet away from any moving parts. Do not insert any objects into any openings.
10. Keep clothes, jewelry and loose items away from moving parts.

NOTE:

MAXIMUM WEIGHT CAPACITY FOR THE VERSASTEP IS 500 LBS. (227 KGS)

WARNING:

BEFORE BEGINNING ANY EXERCISE PROGRAM CONSULT YOUR PHYSICIAN. THIS IS ESPECIALLY IMPORTANT FOR INDIVIDUALS OVER THE AGE OF 35 OR PEOPLE WITH PRE-EXISTING HEALTH PROBLEMS. READ ALL INSTRUCTIONS BEFORE USING THIS FITNESS EQUIPMENT. WE ASSUME NO RESPONSIBILITY FOR PERSONAL INJURY OR PROPERTY DAMAGE SUSTAINED BY OR THROUGH THE USE OF THIS PRODUCT.

Dear Valued Customer,

Thank you for your recent purchase of the **VersaStep** from HCI Fitness. We believe that you have purchased one of the highest quality and affordable recumbent elliptical on the market today. Prior to using your new **VersaStep** please review the operator's manual and product tips to maximize your workout experience.

Wishing you the best of luck in reaching your health and fitness goals!

HealthCare International is a leading supplier and distributor of innovative products for Health, Wellness, Fitness & Active Aging. ***Visit our website – www.HCIFitness.com for information on all of our products.***

Warranty Information

(Your Serial Number is found on a white sticker at the rear base of the unit, the front of the user manual, and on the box)

Serial #:_____Purchase Date:_____

3 Year Parts Warranty, One Year Labor, Lifetime Main Frame

NOTE

Before you start to assemble this unit, please note that some of the parts and screws needed for assembly are already in place on the unit.

TOOL SET:

Tool	QTY
4 mm L type Allen Wrench Tool	1
6 mm L type Allen Wrench Tool	1
5 mm L type Allen Wrench Tool	1
13x15 Screwdriver/Wrench Combo Tool	1

Assembly Instructions

STEP 1: Assembling the Seat and Handle set

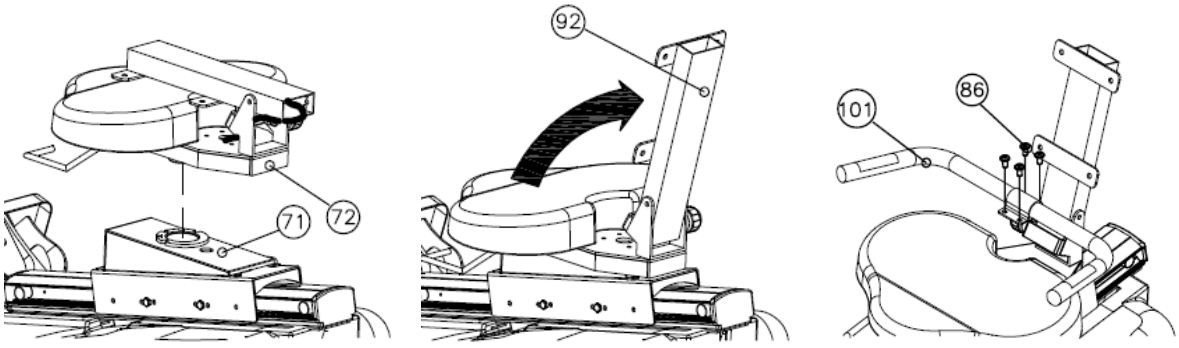

Assemble the rotate post set (72) to seat support (71) and place the back cushion support (92) in an upright position. Attach seat handle set (101) to support using the bolts (86). Secure the bolts tightly.

STEP 2: Assembling the Han Pulse Sensor Wire and Seat Back Cover

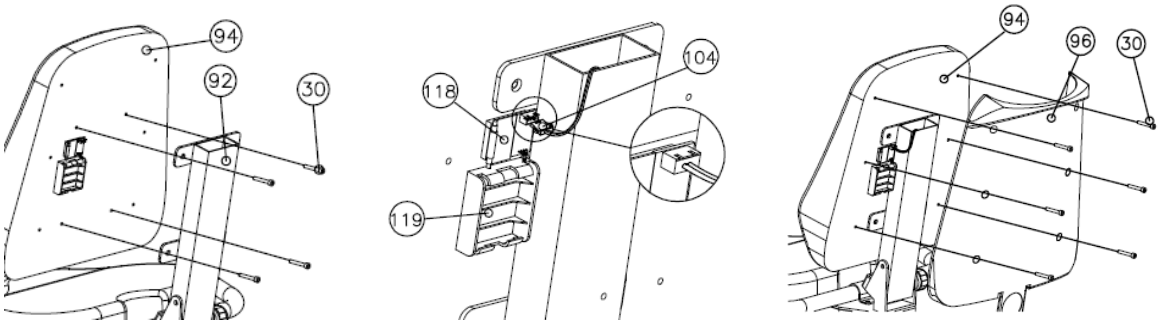

Assemble the back seat (94) by using the screws (30) to secure the back seat support (92). Then connect hand pulse sensor wire (104) and cut off the fixed tie on the bottom of the sensor wire where it connects to the seat handles. Finally attach the seat back cover (96) to the back (94) using the screws (30) secure in place.

Wire Pinch Point

Gently Test the Seat Recline Angle to Ensure the Pulse Wire Moves Freely

Note: If Heart Rate Measurement Appears Inaccurate – Replace Batteries

STEP 3: Assembling Wire and Display Support

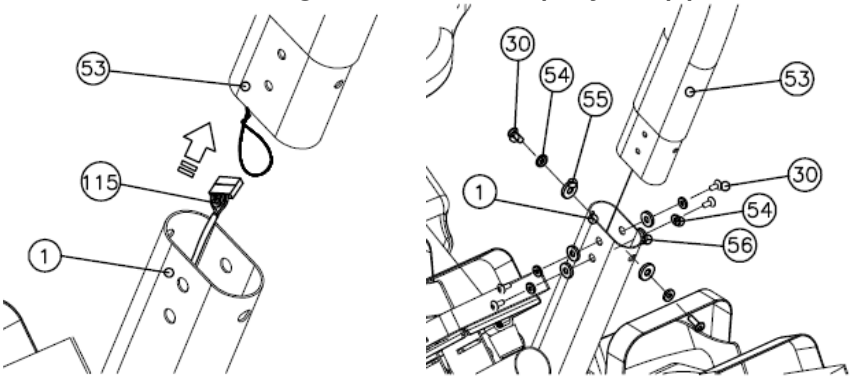

Wire Pinch Point

Gently tie the computer sensor wire (115) to the guide wire from the bottom of computer post (53). Then pull the console wire through the computer post. Insert computer post (53) to the main frame (1) using the screws (30) & washer (54) (55) (56) closet it

STEP 4: Assembling the Water Bottle Holder

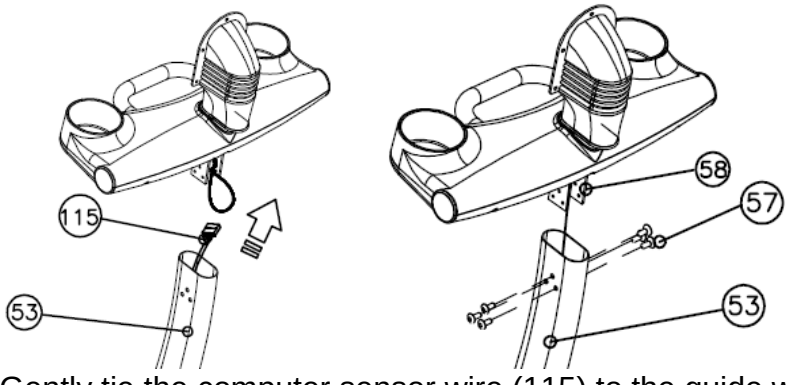

Wire Pinch Point

Gently tie the computer sensor wire (115) to the guide wire from the upper of computer post (53) and assemble the meter holder post (58) using screws (57).

STEP 5: Assembling the Display Console

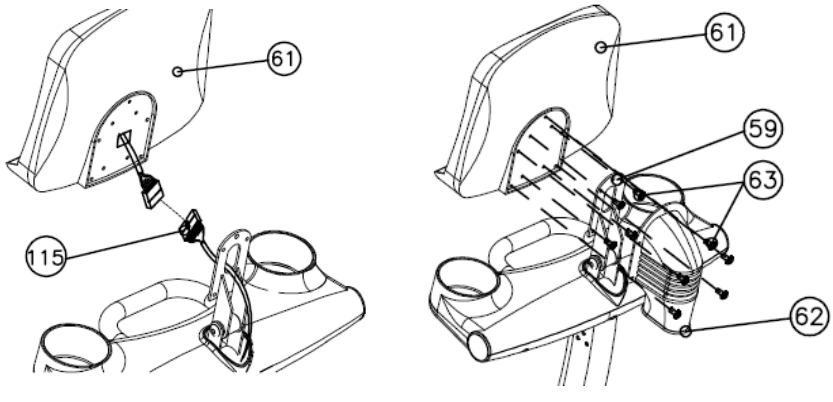

Wire Pinch Point

Connect the computer sensor wire (115) to the upper sensor wire from the Meter (61). Attaching the meter (61) to the meter holder parts (59) using the screws (63). Finally attach the meter back rubber cover (62) to the Meter (61) using screws (63).

STEP 6: Assembling the Moving Handle and Hand Grip

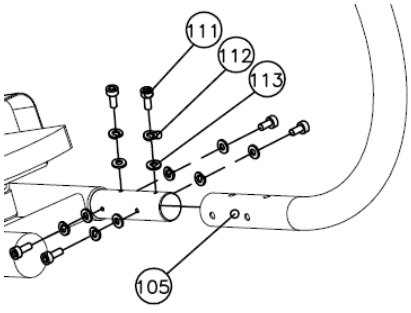

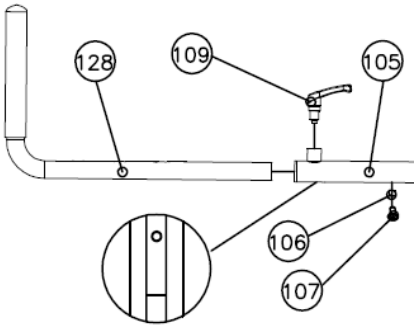

Assemble the moving handle (105) using screws (111) washers (112) (113). Then Insert the L type Handle (128) to the Moving Handle (105) using the rotary hand (109) to lock it.

STEP 7: Seat back Adjustment

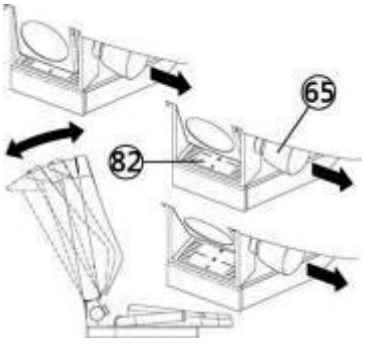

Pull out the backseat knob to adjust the angle of seat back.

Quick Tips

Self-Powered Unit

The **VersaStep** is self-powered and does not need to be plugged into an outlet. The display will automatically turn on once you start moving the arms or feet.

Levelers:

There are levelers in the front of the unit, beneath the shroud. Please adjust the levelers to stabilize the unit on your floor.

Seat Adjustments:

The **VersaStep** seat position can be adjusted forward and backward by pulling the yellow bar located on the right side of the seat. In addition you can adjust the tilt of the **VersaStep** seat back by pulling the knob located on the back cushion support.

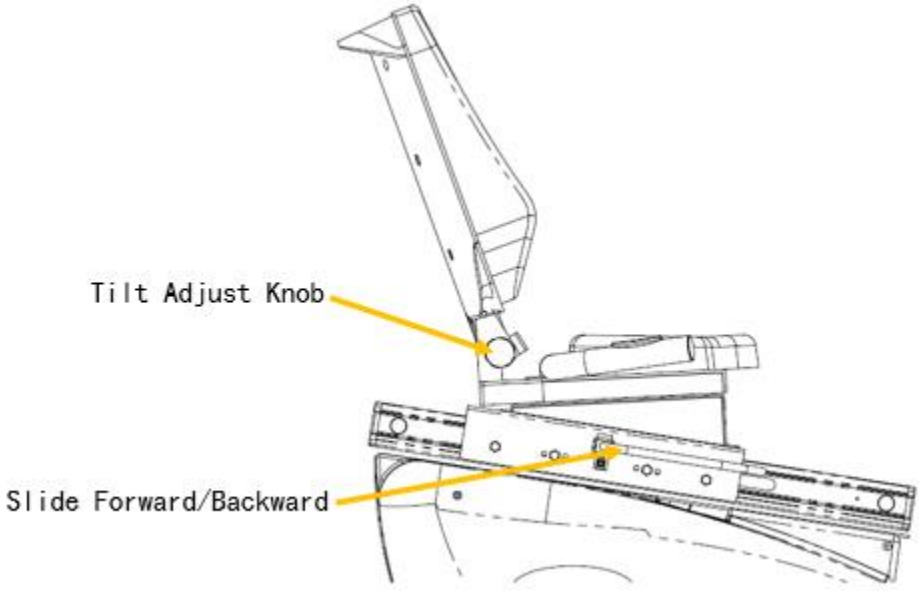

Quick Start:

If you would like to start a simple workout, press the Start Button and use the arrows to set the resistance. It will automatically start you at level 1.

Heart Rate:

If you would like to monitor your heart rate while using the **VersaStep**, simply place your hands on the contact heart rate. You can also connect a wireless heartrate receiver such as POLAR.

.

USB Workout Summary Report:

The **VersaStep** features a USB workout summary report. The USB slot is located on the back of the display. Simply insert a USB into the back of the display before you start your work out and press the **REPORT** button when you are finished with your workout. Please view **page 17** for more detail.

The USB workout summary feedback reports total time, total calories, total distance, as well as Averages and Peaks for METS, WATTs, Heart Rate, Steps Per Minute, and Speed.

VersaStep Display Console

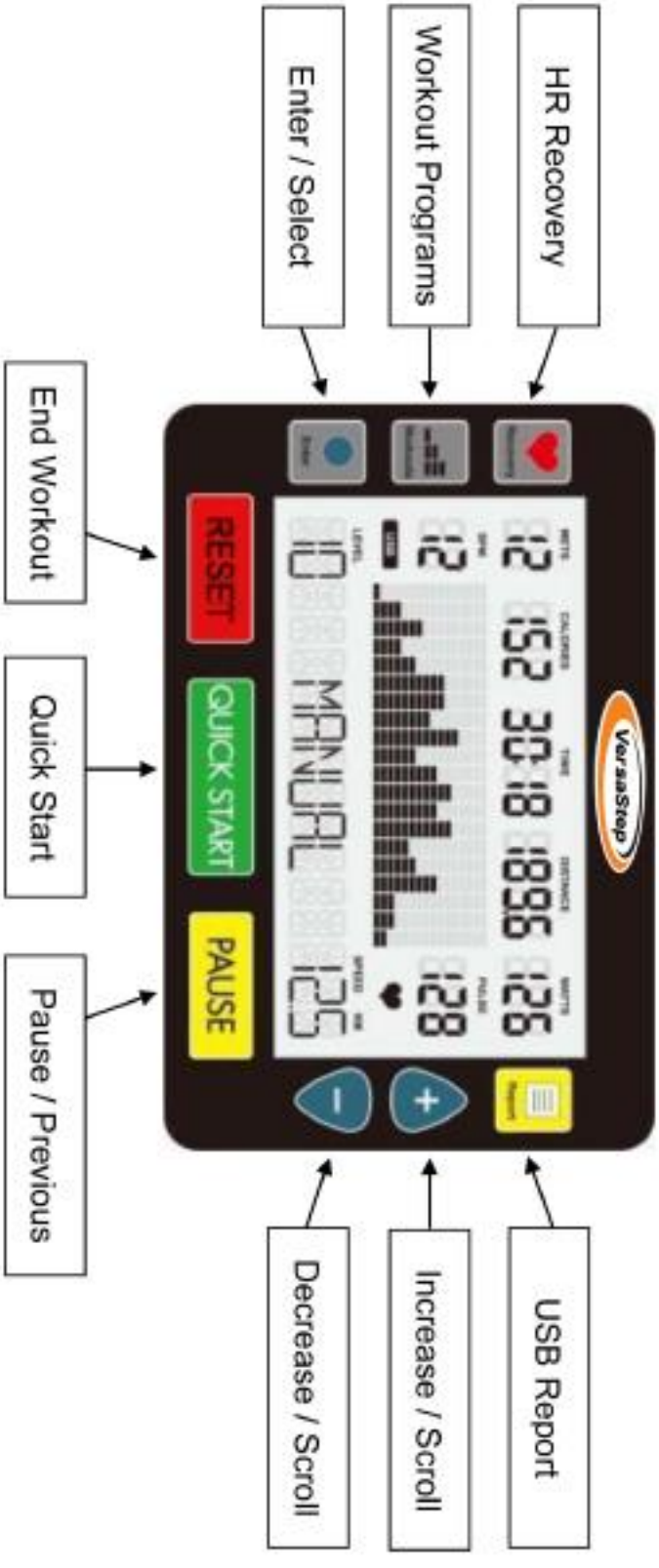

Button Functions

1. **QUICK START BUTTON**
   1.1. Pressing the **QUICK START** button starts a manual workout.
2. **ENTER BUTTON**
   2.1. The **ENTER** button selects programs and confirms data entry.
3. **[+] / UP BUTTON**
   3.1. Press the **[+]** button to increase values.
   3.2. Holding the **[+]** button will rapidly increase values.
4. **[-] / DOWN BUTTON**
   4.1. Press the **[-]** button to decrease values.
   4.2. Holding the **[-]** button will rapidly decrease values.
5. **WORKOUTS BUTTON**
   5.1. Before you start your workout, press the **WORKOUTS** button to choose a preset program. Continue to press the **WORKOUTS** button to cycle through the programs.
   5.2. If you have already started a workout, press **RESET** twice then use the **WORKOUTS** button as explained above.
6. **RECOVERY BUTTON**
   6.1. The recovery function is only available when using a HR monitor.
   6.2. Press the **RECOVERY** button to enter the cool down mode.
   6.3. When in the recovery mode, all other buttons are disabled.
7. **PAUSE BUTTON**
   7.1. While exercising press the **PAUSE** button to pause your workout. The display will show "*Press QUICKSTART to resume or RESET for workout summary".*
   7.2. Press the **QUICKSTART** button to resume your workout.
   7.3. Press the **RESET** button to view your workout summary.
   7.4. In the Report Mode, the **PAUSE** button will return you to the last step.
8. **RESET BUTTON**
   8.1. To end your workout and view your workout summary press the **RESET** button.
   8.2. Holding down the **RESET** button for 3 seconds will reset the display.
9. **REPORT BUTTON**
   9.1. Enables the USB workout report export function in summary mode.

Quick Start – Sit, Start, & Step!

1. Adjust your seat and handles to a comfortable position allowing your legs and arms to use the full range of motion. Move the arms or legs to power the unit.
2. Press the **QUICK START** button.
3. Start Stepping! You can use **[+] / [-]** buttons to adjust the resistance level at any time during your workout.

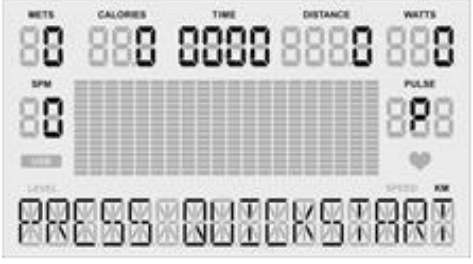

OR

Select a Workout Program

1. Press the **WORKOUTS** button to view programs.
2. To scroll through the different programs continue to press the **WORKOUTS** button.
3. Then press the **Enter** button to select your desired workout program.
4. Follow the steps described in the next section to start your desired workout.

If you have not selected anything after 5 minutes the display will automatically power off.

Setup your Workout Programs

Before starting your workout make sure that your seat is comfortably adjusted.

NOTE: Use the **WORKOUTS** button to cycle through programs. Press the **WORKOUTS** button again to view the next workout. Press **ENTER** to select your desired workout.

User Setup:

After selecting your desired workout the first step is to enter your user information. This step will be the same for all workouts.

*Use the **PAUSE** button to return to the previous step when entering user info.*

Gender: Use the **[+] / [-]** buttons to change Male **(M)** or Female **(F).**

Press the **ENTER** button to set gender.

Age: Use the **[+] / [-]** buttons to change your age.

Press the **ENTER** button to set age.

Weight: Use the **[+] / [-]** buttons to change your weight.

Press the **ENTER** button to set weight.

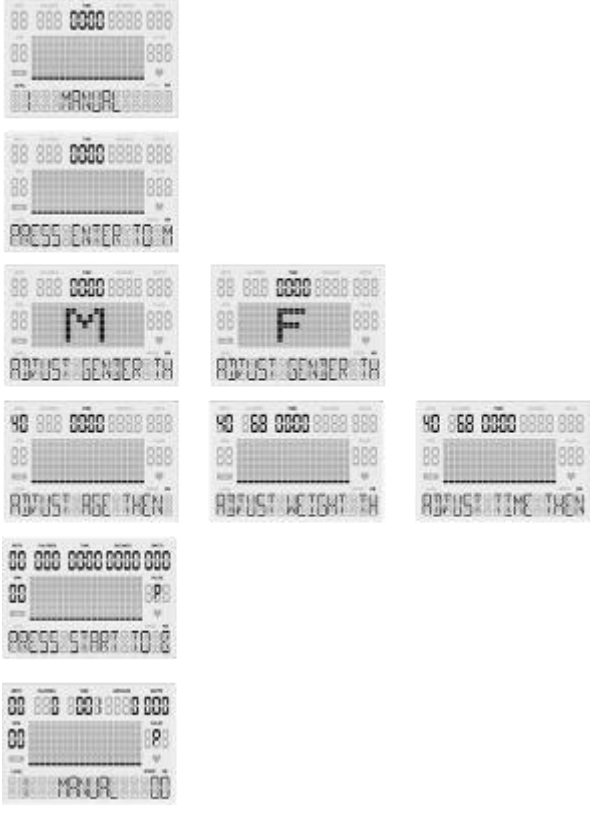

1. Basic Programs

Manual, Warm Up, Interval, Valley, Ramp, Mountain, Rolling, Climb, Random, Hill, Fat Burn, Cardio, and Strength.

1.1. **User Setup -** You will be prompted gender, age, weight, and time.

*Use the **PAUSE** button to return to the previous step when entering user info.*

1.2. **Set Time:** Use the **[+] / [-]** buttons to set workout time. (Counting Down)

1.2.1.1. Press the **ENTER** button to set workout time.

1.3. Once your user information has been entered press **Quick Start!**

1.4. In the basic programs you can use the **[+] / [-]** buttons to change the resistance level.

1.5. Once your workout is complete a 3 minute Cool Down will begin.

Basic Programs Screens

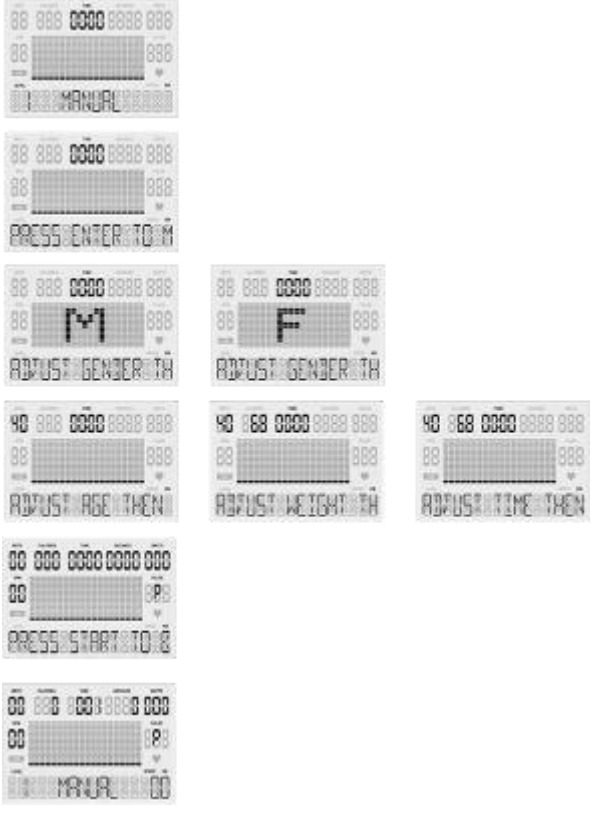

2. <u>Heart Rate Programs (HR 65% / HR 85%)</u> ***Requires HR Monitor***

2.1. **User Setup -** You will be prompted gender, age, weight, time, & HR.

*Use the **PAUSE** button to return to the previous step when entering user info.*

2.1.1. **Set Time:** Use the **[+] / [-]** buttons to set workout time. (Counting Down)

2.1.1.1. Press the **ENTER** button to set workout time.

2.1.2. **Pulse:** Use the **[+] / [-]** buttons to change your target heart rate.

(Shown as percentage [65% or 85%] of full target heart rate)

2.1.2.1. Press the **ENTER** button to set your target heart rate.

2.2. Once your user information has been entered press **Quick Start!**

2.3. If your heart rate cannot be detected, the screen will show [? ♥] and reset to the home screen.

2.4. In the Heart Rate programs your resistance level will automatically increase or decrease to help reach your target heart rate.

2.5. Once your workout is complete a 3 minute Cool Down will begin.

Heart Rate Programs Screens

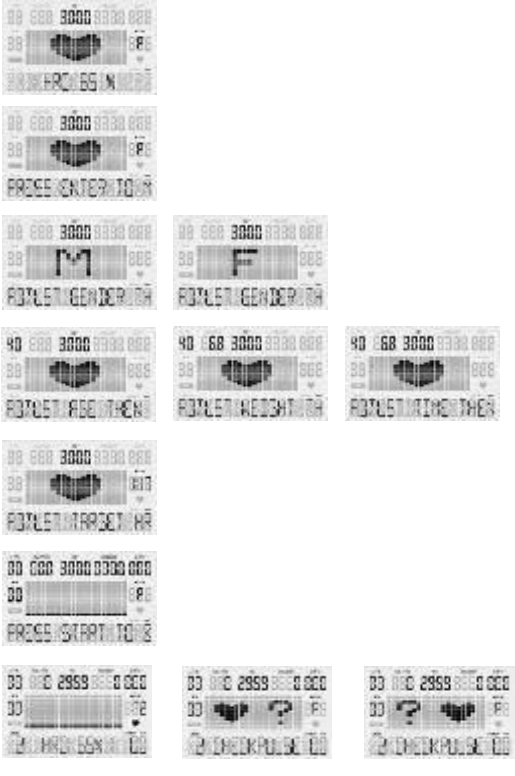

3. Constant Programs (SPM / WATTS)

3.1. **User Setup -** You will be prompted gender, age, weight, time & constant.

*Use the **PAUSE** button to return to the previous step when entering user info.*

3.1.1. **Set Time:** Use the **[+] / [-]** buttons to set workout time. (Counting Down)

3.1.1.1. Press the **ENTER** button to set workout time.

3.1.2. **Set SPM / WATTS:** Use the **[+] / [-]** buttons to change your constant metric.

3.1.2.1. Press the **ENTER** button to set your constant metric.

3.2. Once your user information has been entered press **Quick Start!**

3.3. If you are not using the machine, the screen will show "[?] *Check SPM"*

3.4. In the constant programs your resistance level will automatically increase or decrease to maintain constant SPM or WATTS.

3.5. Once your workout is complete a 3 minute Cool Down will begin.

Constant Programs Screens

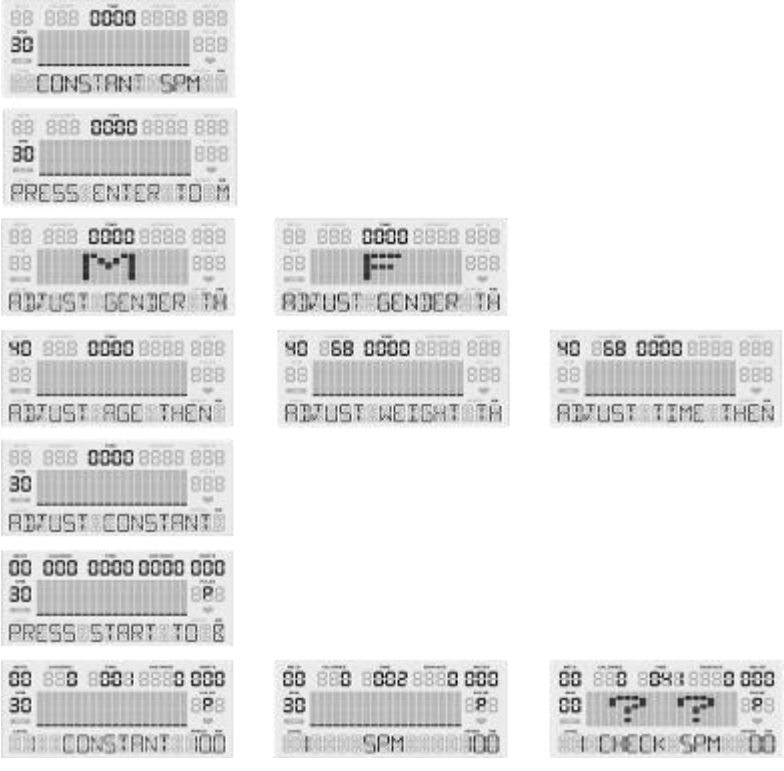

4. Goal Set Programs (Calories / Distance)

4.1. **User Setup -** You will be promoted gender, age, weight, time, & goal.

*Use the **PAUSE** button to return to the previous step when entering user info.*

4.1.1. **Set Time:** Use the **[+] / [-]** buttons to set workout time. (Counting Down)

4.1.1.1. Press the **ENTER** button to set workout time.

4.1.2. **Set Calories / Distance:** Use the **[+] / [-]** buttons to change your goal.

4.1.2.1. Press the **ENTER** button to set your goal.

4.2. Once your user information has been entered press **Quick Start!**

4.3. In the Goal programs your workout will complete once your goal is reached. Use the **[+] / [-]** buttons to change the resistance level.

4.4. Once your workout is complete a 3 minute Cool Down will begin.

Goal Set Programs Screens

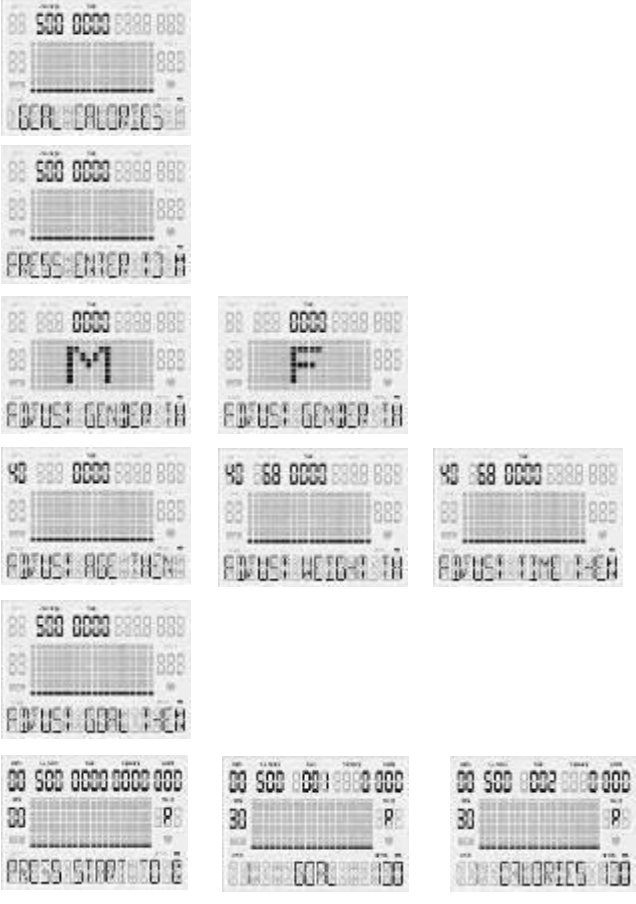

Custom User Programs (User 1)

Create a custom protocol with user selected watt resistance levels with up to 20 equally timed stages.

Set Time Interval for Stages

Total Time	Individual Stage Time
10 Minutes	30 Seconds
20 Minutes	1 Minute

1.1. **User Setup -** You will be prompted to enter; gender, age, weight, time, & level profile.

*Use the **PAUSE** button to return to the previous step when entering user info.*

1.1.1. **Set Time:** Use the **[+] / [-]** buttons to set workout time. (Counting Down)

1.1.1.1. Press the **ENTER** button to set workout time.

1.1.2. **Set Custom WATT Levels:** Use the **[+] / [-]** buttons to change your training resistance level.

1.1.2.1. Press the **ENTER** button to set your custom workout.

1.2. Once your user information has been entered press **Quick Start!**

1.3. Once your workout is complete a 3 minute Cool Down will begin.

Cool Down Mode

1. After completing your workout program a 3 **minute cool down** will automatically start.
2. Press the **PAUSE** button to pause your cool down, and **QUICK START** to resume your cool down.
3. Press the **RESET** button to skip the cool down and view workout summary.

Workout Summary Mode

** After cool down mode, the display shows workout summary**

1. The workout summary mode displays your personal data as shown below: Total Time, Distance and Calories; as well as Average METs, WATTS, Steps per Minute (SPM) and Pulse.

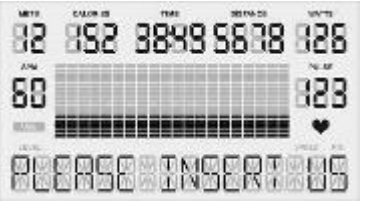

Export Workout Summary to USB

****USB Slot Located on Back of Display****

1. Insert your USB into the USB slot on the back of the display.
2. When the USB is correctly inserted the display will show the symbol “USB.”
3. When you have completed your workout and are on the Workout Summary Mode screen, press the **REPORT** button to begin the export process.
4. Press the **ENTER** button twice to set your Workout ID.

5. Use the **[+] / [-]** buttons to scroll through values (a-z and #0-9). Press the **ENTER** button to select a value and move to the next space.
6. Set your ID by pressing the **ENTER** button until you reach the last space.

PLEASE NOTE: *At any time you can press* ***PAUSE*** *to return to the previous step.*

7. After you have set your personal ID, press **ENTER** to select the date (Day / Month / Year). Use the **[+] / [-]** buttons to scroll through the values [a-z and #0-9]. Once the date is selected, press the **ENTER** button to confirm and complete.

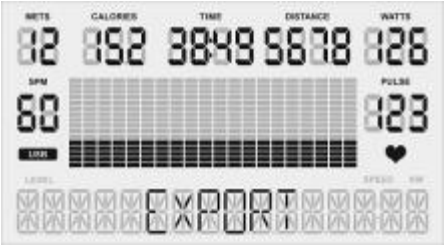

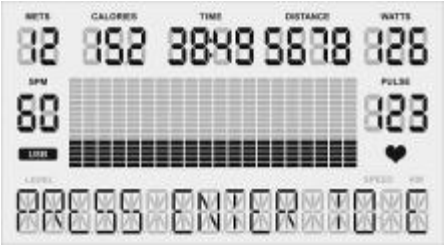

8. Once the date is complete, the display will show the messages "*Export"* and *"Press **Enter** to Export Data".* Press the **ENTER** button to export your workout summary report to USB. Saving your workout summary will take a few seconds.
9. Your workout summary report will be saved in a .csv file that you can open in excel. The display will read "*Complete"* when it has been exported successfully.
10. If there is an error during the data export, the display will read "*Error."* If this happens, press the **PAUSE** button to return to the previous step and export again.

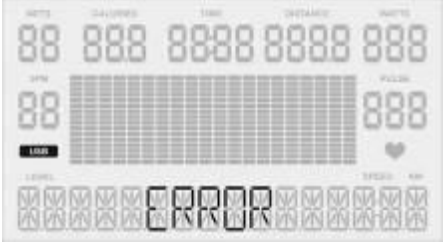

Sleep Mode

- If you do not use the unit for five minutes the display will automatically power off.
- In sleep mode, the LCD monitor will be powered off; any buttons or USB functions will be disabled.
- To wake the unit – start using the machine again and it will power on.

Recovery Mode

Requires HR Monitor

1. At any time during a workout program you can press the **RECOVERY** button to enter the recovery mode to see how quickly your body returns to its resting heart rate.

2. Once in the recovery mode the user's peak heart rate is displayed on the top left with the active heart rate below. You will have 1 minute to monitor your heart rate in recovery mode.

3. When the recovery is complete, the screen will display: Excellent (F1.0), Very Good (F2.0), Good (F3.0), Satisfactory (F4.0), Sufficient (F5.0) or Fail (F6.0) based on the rate of recovery.

4. P0 = the user's heart rate when the recovery mode was initiated.

   P1 = the user's heart rate after completing the recovery mode.

Using Optional Heart Rate Monitors

1. Chest Strap

   1.1. In order to insure the chest strap is working correctly please refer to the manufacturer's instructions. In general, the chest strap must remain wet to accurately work. Moistening the electrodes is very important. Be sure to fasten the strap correctly below your pectoral muscle.

General Maintenance

1. **Cleaning -** Use soap and warm water or antibacterial wipes to clean the surface of your unit.
2. **Tightening -** Periodically inspect your unit to ensure that all screws, nuts, and bolts are tightened and retighten if necessary. Do not over tighten.

Recommended Maintenance Inspection Schedule

Item	6 Months	1 Year	3 Years	5 Years
Frame				X
Electrical			X	
Mechanical			X	
Labor		X		
Upholstery, Seats, Grips, Belts		X		
High Wear Items (Heart rate Straps, Pedal Straps)	X			

General Display Information

1. **Gender**

   1.1. Men are MALE, Women are FEMALE (preset value is MALE).

   1.2. The display shows [M] / [F] when setting.

2. **Age**

   2.1. The age range is between 10 and 99, preset value is 40 years old.

   2.2. Age is shown in the top left of the display in the METS window.

3. **Weight**

   3.1. The weight range is between 40 – 500 lbs (30 – 227 KG), preset value is 150 lbs (68 KG).

   3.2. Weight is shown next to age in the calories window.

4. **Target Heart Rate (THR)**

   4.1. Using the Heart Rate Control (HRC) programs the user can train at 65% or 85% of their target heart rate.

   4.2. When setting age in the Heart Rate Control programs, the computer will calculate a proposed target heart rate for the user. The target heart rate shown on the screen is a percentage (65% or 85%) of your full target heart rate. You can adjust your target heart rate using the **[+] / [-]** buttons and set your desired target heart rate by pressing **ENTER.**

   4.3. Target Heart Rate Formula = (220 – AGE) * X%

NOTE: Target Heart Rate Function is only available when using a HR monitor.

5. **Pulse**

   5.1. When using a heart rate monitor, your heart rate will show in the pulse window on the right side of the display. If your heart rate cannot be detected, the pulse window will show (_P_).

6. **Units**

   6.1. Miles are denoted as M, Kilometers are denoted as KM. Preset value: **M**

   6.2. To change units please view the Change Units Section on page 21

7. **METs**

   7.1. The Metabolic Equivalent of Task (MET), or simply metabolic equivalent, is a physiological measure expressing the energy cost of physical activities and is defined as the rate of energy consumption during a specific physical activity. PhysioStep METs calculations are based on ACSM formulas.

8. **Steps Per Minute (SPM)**

   8.1. Calculates your steps per minutes based on your revolutions per minute (RPM). Steps per minute are shown on the left of the display.

Display Settings – Engineering Mode

To enter the Engineering Mode first make sure you are on the home screen by pressing **RESET** twice. Then press and hold **ENTER, QUICK START**, and **[+]** button at the same time.

Once in the Engineering Mode press **ENTER** to view settings and **[+] / [-]** buttons to cycle settings. Press **PAUSE** to go back a page.

Edit Settings

Use the **ENTER** button to select a setting from the list (Including "EXIT").

Use the **[+] / [-]** buttons to navigate and change settings.

Use the **QUICK START** button to confirm changes to settings.

The **PAUSE** button will take you to the previous screen.

1. **Key Test** – Make sure all of your keys are functioning. Press all the keys!
2. **Display Test** – See if any dot cells are not working on your display.
3. **Functions**
   - 3.1. **ODO Reset** – Reset your unit's internal odometer.
   - 3.2. **Change Units** – Use the [+] / [-] buttons to change units.
     - 3.2.1. When the correct unit is displayed press **QUICK START**.
     - 3.2.2. Press **PAUSE** to go to the previous page.
     - 3.2.3. Use **[+] / [-]** buttons to navigate to "EXIT" then press **ENTER** to return to the home screen.
     - 3.2.4. On the home screen ("M') for miles or ("KM") for kilometers will show on the bottom right of the display.
   - 3.3. **Display Mode** – Turn display mode "ON" or "OFF".
   - 3.4. **Manual** – DO NOT CHANGE
   - 3.5. **Elliptical or Bike** – setting for elliptical or bike. (DO NOT CHANGE).
   - 3.6. **Key Tone**– Turn Key tone "ON" or "OFF".
4. **Security**
   - 4.1. **Child Lock** – Turn child lock "ON" or "OFF".
5. **Factory Set** – Reset your unit to default settings.
6. **Exit**

Exploded Diagram

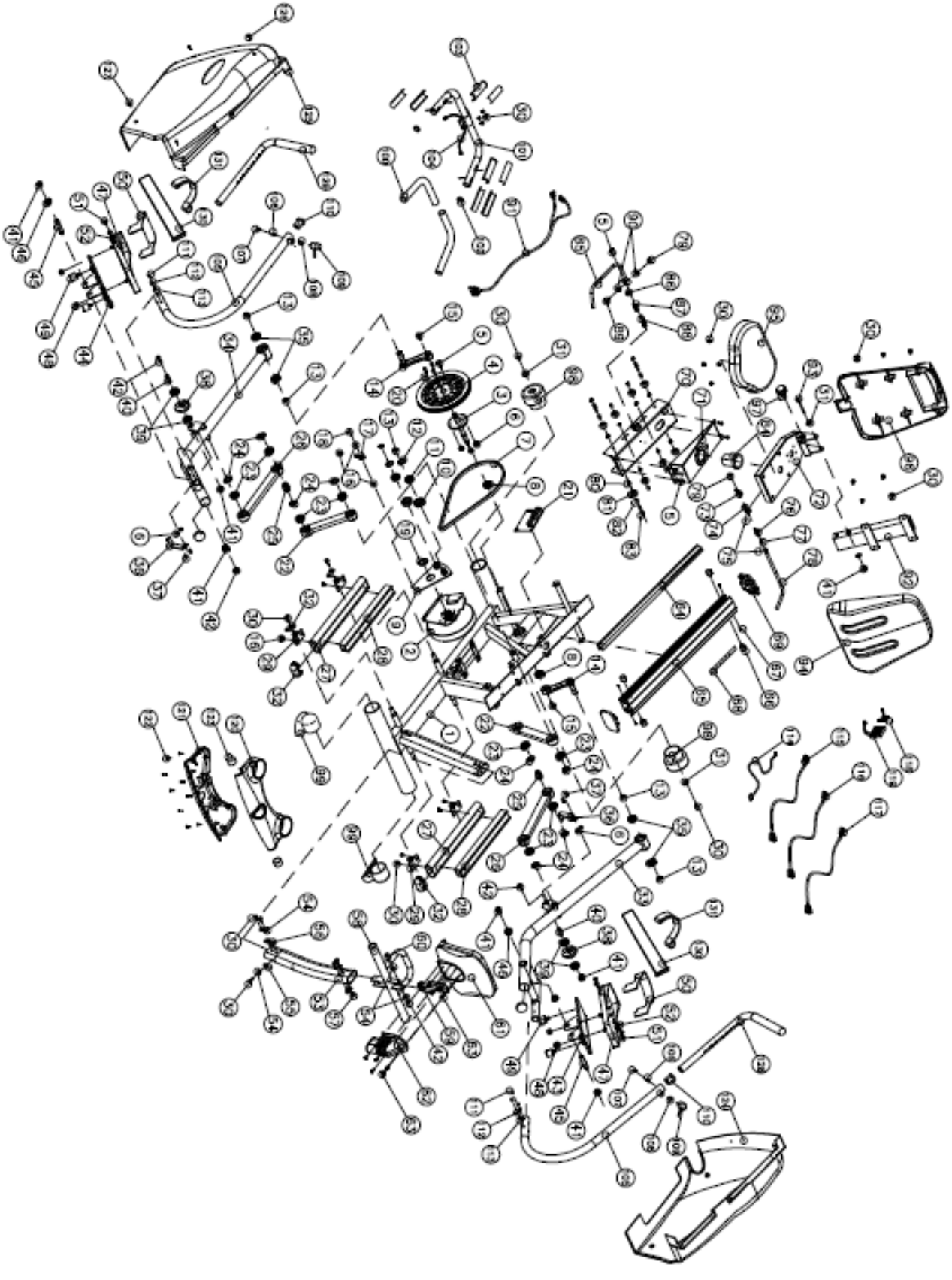

Parts List

Error! Not a valid link.

Parts List

No.	Description	Q'ty	No.	Description	Q'ty
81	PU Wheel	8	107	Screw-M4x12L	2
82	Bushing-8.3x12.7x11.5T	4	108	Hand Fixed Block	2
83	Roller Axle	4	109	Rotary Hand	2
84	POM	1	110	Place Control	2
85	Dipping Handle	1	111	Screw-M6x15L	16
86	Washer Ø6xØ22x2T	4	112	Spring Washer M6	16
87	Press Spring ψ2.0xψ18.5x36L	1	113	Curved Washer M6	16
88	Seat Adjust Position Shaft	1	114	Square magnetic sensor 24AWGx2Cx800L	1
89	Screw-M10x45L	1	115	Computer Sensor Wire	1
90	Washer Ø10xØ19x1T	4	116	Control Cable Wire 750mm	1
91	Hand Pulse Sensor(upper) 1000mm	1	117	Brake Cable Wire 850mm	1
92	Back Seat Support	1	118	Wireless Receiver	1
93	Screw-M8x100L	1	119	Battery holder	1
94	Back Seat	1	120	Upper Water Bottle Holder	1
95	Seat	1	121	Lower Water Bottle Holder	1
96	Seat back Cover	1	122	Screw-M5*10L	10
97	Knob M16xP1.5x25L	1	123	Plastic Cover	2
98	Rear Leg Wheel	2	124	Back Plastic Cover L	1
99	Adjustable Knob	2	125	Back Plastic Cover R	1
100	Handle Sponge	1	126	Screw-ST4x20L	26
101	Seat Handlebar	2	127	Screw-ST4x12L	14
102	Tube Cover	2	128	L type handle(L)	1
103	Hand Pulse Sensor Base	2	129	L type handle(R)	1
104	Hand Pulse Sensor 700mm	1	130	Pedal Strap-2"x720mmL	2
105	Moving Handle(R/L)	2	131	Pedal Strap-25x650L	2
106	Support Pin	2			