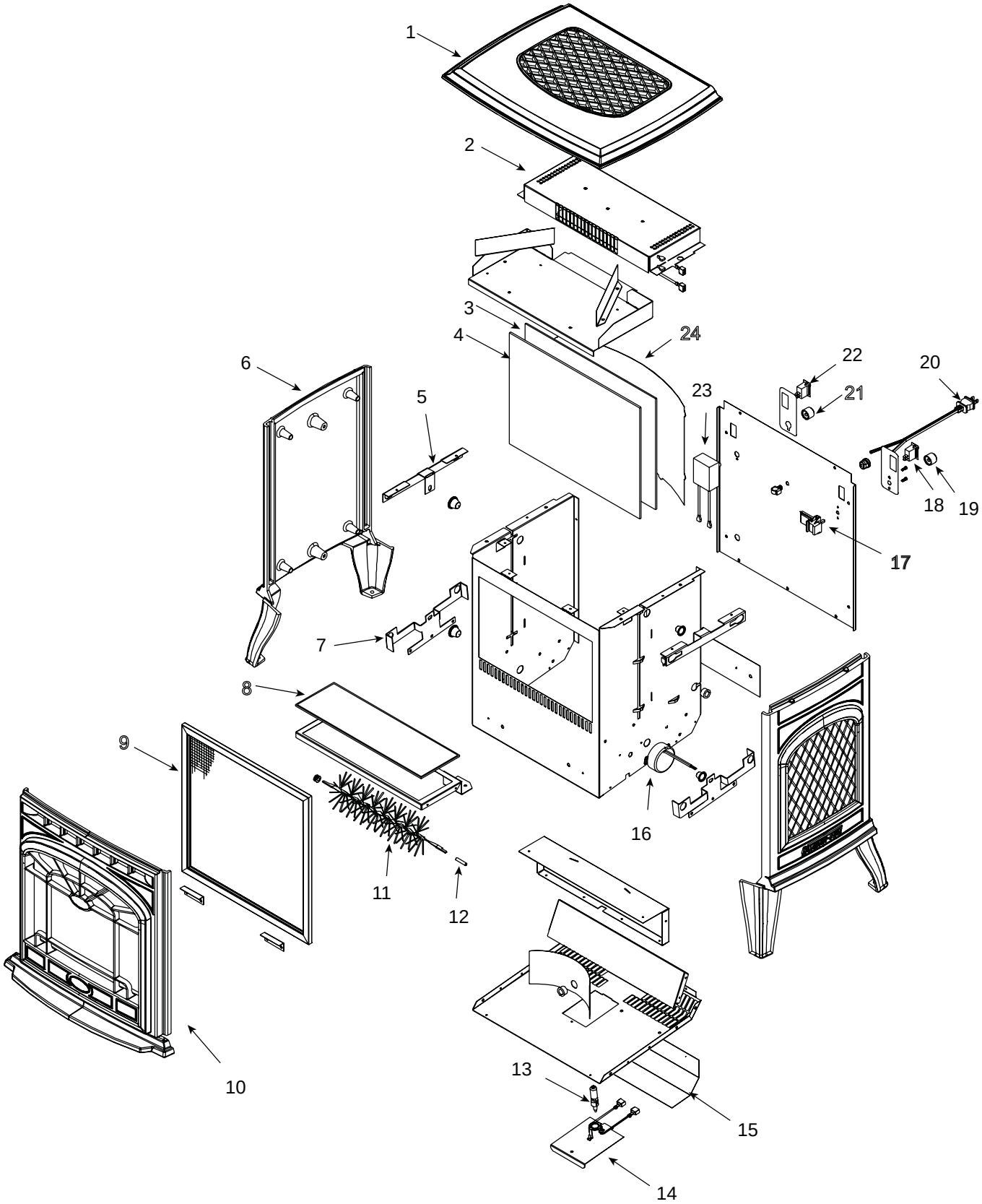

Part number list on following page.

QUADRA-FIRE®

Service Parts

GarnetE-MBK-C

Service Parts List
Black Electric Appliance

Beginning Manufacturing Date: Oct. 2005
Ending Manufacturing Date: Mar. 2006

IMPORTANT: THIS IS DATED INFORMATION. When requesting service or replacement parts for your appliance please provide model number and serial number. All parts listed in this manual may be ordered from an authorized dealer.

ITEM	DESCRIPTION	SERIAL #	PART NUMBER	Stocked at Depot
	Log Assembly		4035-156	**Y**
1	Top Casting	**Ref: Black**	464-0140MBK	
2	Heater Assembly		4035-155	**Y**
3	Lens		4035-804	**Y**
4	Back Glass		4035-801	**Y**
5	Upper Casting Support	Qty 2 req	4035-306	
6	Side Casting (Left and/or Right)	**Ref: Black**	7016-109MBK	
7	Lower Casting Support	Qty 2 req	4035-307	
8	Ember Bed		4035-818	**Y**
9	Front Screen Assembly		4035-151	
10	Front Casting	**Ref: Black**	464-0160	
11	Flame Element Assembly		4035-153	**Y**
12	Heat Shrink		4030-810	
13	Halogen Bulb		33961	**Y**
14	Socket Assembly		4035-152	
15	Outer Bottom Light Shield		4035-322	**Y**
16	Motor		4035-860	**Y**
17	Bi-metal Thermostat		4035-808	**Y**
18	Rocker Switch		060-511	**Y**
19	(Thermostat) Knob		4035-826	**Y**
20	Two Prong Power Cord		4030-802	**Y**
21	Knob		19942	**Y**
22	Rocker Switch		060-511	**Y**
23	Variable Control		4035-809	**Y**
24	Flame Panel		4035-308	
	** Contact your local distributor/dealer to order Casting parts			

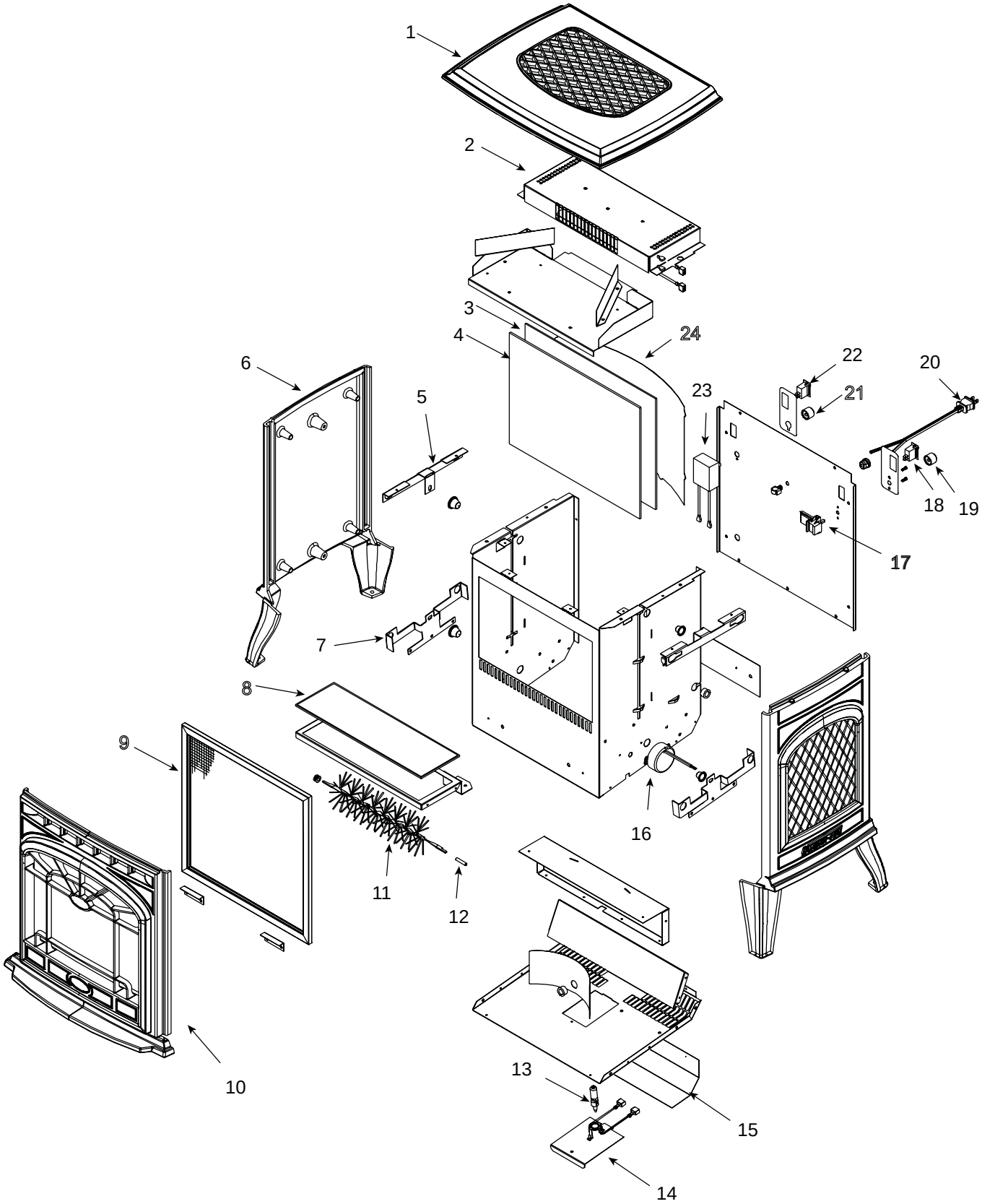

Part number list on following page.

QUADRA-FIRE®

Service Parts

GarnetE-PMH-C

Service Parts List
Mahogany Electric Appliance

Beginning Manufacturing Date: Oct. 2005
Ending Manufacturing Date: Mar. 2006

IMPORTANT: THIS IS DATED INFORMATION. When requesting service or replacement parts for your appliance please provide model number and serial number. All parts listed in this manual may be ordered from an authorized dealer.

ITEM	DESCRIPTION	SERIAL #	PART NUMBER	Stocked at Depot
	Log Assembly		4035-156	**Y**
1	Top Casting	**Ref: Mahogany**	464-0140	
2	Heater Assembly		4035-155	**Y**
3	Lens		4035-804	**Y**
4	Back Glass		4035-801	**Y**
5	Upper Casting Support	Qty 2 req	4035-306	
6	Side Casting (Left and/or Right)	**Ref: Mahogany**	7016-109POR	
7	Lower Casting Support	Qty 2 req	4035-307	
8	Ember Bed		4035-818	**Y**
9	Front Screen Assembly		4035-151	
10	Front Casting	**Ref: Mahogany**	464-0160	
11	Flame Element Assembly		4035-153	**Y**
12	Heat Shrink		4030-810	
13	Halogen Bulb		33961	**Y**
14	Socket Assembly		4035-152	
15	Outer Bottom Light Shield		4035-322	**Y**
16	Motor		4035-860	**Y**
17	Bi-metal Thermostat		4035-808	**Y**
18	Rocker Switch		060-511	**Y**
19	(Thermostat) Knob		4035-826	**Y**
20	Two Prong Power Cord		4030-802	**Y**
21	Knob		19942	**Y**
22	Rocker Switch		060-511	**Y**
23	Variable Control		4035-809	**Y**
24	Flame Panel		4035-308	
	** Contact your local distributor/dealer to order Casting parts			