ProStereo™

ProStereo™ H2

Stereo Bluetooth® Headphones

Quick Start Guide

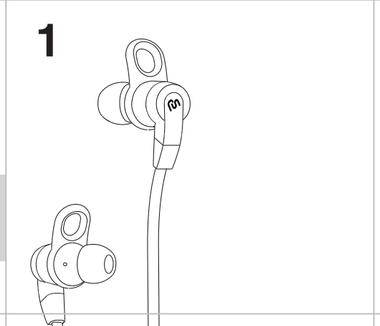

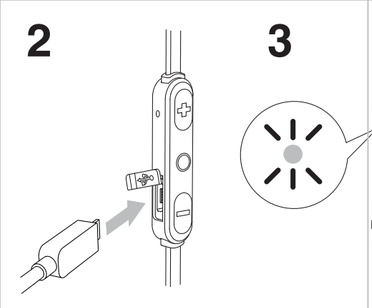

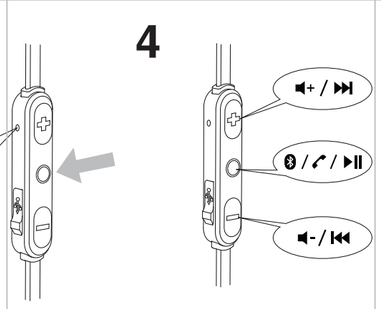

"Sweat,water and oil resistant" or similar wordings means that the corresponding i.Tech product is "Sweat, water and oil" proof designs which resistant to "Sweat, water and oil" in normal use of products including non-water job duties/sports, sweats and accidental splash of water. The "Sweat, water and oil resistant" is to protect the internal electronics from liquid corrosion when liquid covered. Do not submerge your headset in liquid or try to wash in any circumstance. If there's any sweat, water and oil on headset in normal use, please wipe with dry, absorbent cloth or paper towel. Do not try to shake or blow to dry it up. Any uses or submerge in water will void the Limited Warranty. The "Sweat, water and oil resistant" is under i.Tech 1 year warranty period in normal use"

Version 1.0

All features, functionality and other product specifications, as well as the information contained in this guide, are based upon the latest available information and believed to be accurate at the time of printing. i.Tech reserves the right to change or modify any information or specifications without notice or obligation. The latest version of this guide can be obtained from www.ProStereo.net. The images in this guide are for reference only. LDAC and LDAC logo are trademarks of Sony Corporation. Qualcomm is a trademark of Qualcomm Incorporated, registered in the United States and other countries, used with permission. aptX is a trademark of Qualcomm Technologies International, Ltd., registered in the United States and other countries, used with permission. AKM is a trademark of Asahi Kasei Microdevices Corporation in Japan, Europe and the United States. ProStereo™ is a brand of i.Tech Dynamic Global Distribution Limited. The *Bluetooth*® word mark and logos are registered trademarks owned by the Bluetooth SIG, Inc. and any use of such marks by i.Tech Dynamic Global Distribution Ltd. is under license. Other trademarks and trade names are those of their respective owners.

Type: HH2AA

Dispose of the packaging and this product in accordance with the latest provisions

Printed in China

「 經型式認證合格之低功率射頻電機，非經許可，公司、商號或使用者均不得擅自變更頻率、加大功率或變更原設計之特性及功能 」。
「 低功率射頻電機之使用不得影響飛航安全及干擾合法通信；經發現有干擾現象時，應立即停用，並改善至無干擾時方得繼續使用。前項合法通信，指依電信法規定作業之無線電通信。低功率射頻電機須忍受合法通信或工業、科學及醫療用電波輻射性電機設備之干擾 」。

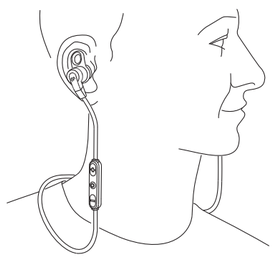

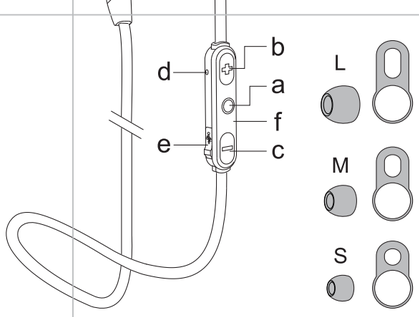

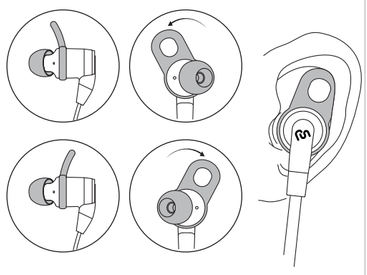

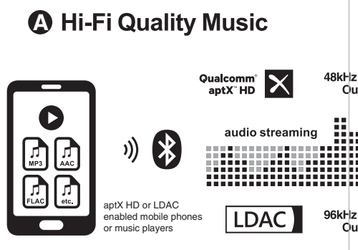

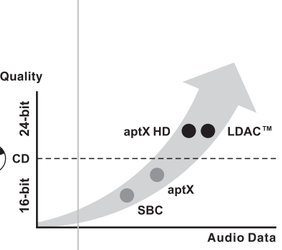

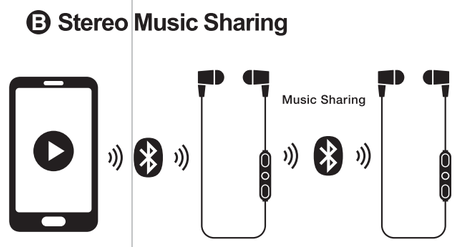

EN 1. About your ProStereo™ H2

a. **Multi-function Button (MFB)**
   - **Power On / Off**
   - **Pair with mobile phone**
   - **Answer / End a call**
b. **Volume Up Button**
c. **Volume Down Button**
d. **Status Indicator**
e. **USB Charging Socket**
f. **Built-in microphone**

2. Charging Your Headset

The headset comes with a built-in rechargeable battery. Prior to using the headset for the first time, it is recommended to fully charge the battery.
Insert the charger's plug into the headset's USB charging socket and plug the mains charger to an AC wall outlet or plug to the PC/notebook.
Use only the supplied charger / USB charging cable to charge the headset.

Headset Status	Status Indicator Light
Low battery	Flash red 3 times per 3 minutes with voice prompt "Battery Low"
Charging	Solid red
Fully charged	Off

Around 2 hours are required to fully charge the Headset.

* Warning: It is recommended not to use the Headset while it is connected to the charger.

3. Pairing Your Headset with a Bluetooth Device

1) Ensure the Headset is off.
2) To activate the pairing mode, press and hold the Headset's MFB for 6 seconds without releasing your finger until its status indicator flashes blue and red alternately.
3) Activate your mobile phone's Bluetooth, search Bluetooth devices, select "ProStereo H2" and enter the pass code "0000". When the pairing is completed, the Headset's status indicator blue light for 2 second with a voice prompt "Your phone is connected.".

4. Basic Operation

Function	Button	Alert Tone / Voice Prompt	Status Indicator
Power on	Press & hold the MFB for 3 seconds	"Power On"	Blue light flash 3 times
When you turn on your Bluetooth cable for the first time, the Bluetooth cable proceeds into pairing mode, i.e. the status indicator flashes blue and red alternately, you can immediately pair it with your mobile phone.			
Power off	Press & hold the MFB for 3 seconds	"Power Off"	Red light for 2 second
Answer / End a call	Short press the MFB once	– –	– –
Last number redial	Double press the MFB	Short beep	– –

Function	Button	Alert Tone / Voice Prompt	Status Indicator
Voice dial	Short press Volume Up ✚ button at standby mode	Short beep	– –
Configure voice prompt	Long press Volume Up ✚ button, Volume Down ━ button and MFB together at standby mode	Short beep	Purple light flash 3 times
Volume up	Short press ✚ button	– –	– –
Volume down	Short press ━ button	– –	– –

ProStereo H2 is powered by Sony LDAC™ / Qualcomm® aptX™ HD / Qualcomm® aptX™ audio that is Bluetooth wireless technology. ProStereo H2 is built-in with professional AKM™ DAC (Digital to Analog Chipset) which provides clearer audio for listening to music and watching movies.
Qualcomm aptX HD audio ensures your Bluetooth wireless enabled device can deliver High Definition (HD) audio. It preserves sound data through the audio transmission, resulting in a "better-than-CD" listening experience.
LDAC is an audio coding technology developed by Sony that enables the transmission of High-Resolution (Hi-Res) Audio content, even over a Bluetooth connection. Unlike other Bluetooth compatible coding technologies such as SBC, it operates without any down-conversion of the Hi-Res Audio content (*) and allows approximately three times more data (**) than those other technologies to be transmitted over a Bluetooth wireless network with unprecedented sound quality, by means of efficient coding and optimized packetization.
* excluding DSD format contents
** in comparison with SBC (Subband Coding) when the bitrate of 990kbps (96/48kHz) or 909kbps (88.2/44.1kHz) is selected
Sony LDAC / Qualcomm aptX HD / Qualcomm aptX audio is automatically enabled when a mobile phone or audio device supports it.
Sony LDAC / Qualcomm aptX HD audio supports 24-bit audio, so you can wirelessly enjoy studio-quality sound.

Function	Button	Alert Tone / Voice Prompt	Status Indicator
Music track forward	Long press ✚ button	– –	– –
Music track backward	Long press ━ button	– –	– –
Configure audio EQ mode	Short press ✚ button & MFB together at music mode	Short beep	Red light for 1 second
	Default setting is Normal. Each change behaves below effect : Normal → Bass → Rock → Jazz → Normal		

5. Music Sharing

ProStereo H2 supports music sharing feature. This allows a ProStereo H2 Headphones to share the playback music to another ProStereo H2 Headphones thru Bluetooth interface such that the receiving ProStereo H2 Headphones can enjoy the same audio experience in Hi-Fi grade quality as the transmitting ProStereo H2 Headphones. (Fig. Ⓑ)
To enable the music sharing feature, both transmitting ProStereo H2 Headphones (A) and receiving ProStereo H2 Headphones (B) have to be first in standby mode. If either Headphones A or Headphones B is already in music streaming mode, then music sharing feature cannot be initialized.

Steps to initialize the music sharing feature are as follows:
1. Long press Volume Down (━) Button of Headphones A for 3 seconds to start sharing music to Headphones B. The status indicator turns to purple breathing lighting style with a long beep tone and wait for the connection with Headphones B.
2. Long press Volume Up (✚) Button of Headphones B for 3 seconds to start sharing music from Headphones A. The status indicator turns to purple breathing lighting style with a long beep tone and wait for the connection with Headphones A.
3. Headphones A and Headphones B connect each other automatically with a voice prompt "Connected" to confirm if the music sharing session is configured successfully.
4. Now when Headphones A playbacks a music track, Headphones B receives the same music track simultaneously. During playback in music sharing mode, the status indicator shows in blue breathing lighting style for Headphones A and Headphones B, respectively.
5. If Headphones A receives an incoming call during music sharing, the playback music stops automatically in both Headphones A and Headphones B. Headphones A will then hear the ringtone of an incoming call while Headphones B returns to standby status. Headphones A can accept the incoming call by short pressing the MFB button. Once the call ended, the last music will resume to playback on both Headphones A and Headphones B.

To terminate the music sharing session, long press Volume Up (✚) Button and Volume Down (━) Button together of either Headphones A or Headphone B for 3 seconds. If the session ends successfully, the status indicator flashes red 2 times with a long low tone.

Tips:
- Waiting time for music sharing connection may vary from 15 to 60 seconds.
- Make sure you place Headphones A close to Headphones B in order to have a better the connection process and duration.

EN Safety Information

- Check and observe local laws regarding the use of a mobile phone and a Headset while driving. If you use the Headset while driving, ensure your full attention and focus. It is your responsibility to drive safely. Consider to pull off the road before making or answering a call.
- Never leave your Headset above any air bag deployment area inside your car as serious injury may result when an air bag deploys.
- Never allow children to play with the Headset – Small parts may be of choking hazard.
- Observe all signs and displays that require an electrical device or RF radio product to be switched off in designated areas. These could include hospitals, blasting areas, and potentially explosive atmospheres.
- Turn off your Headset prior to boarding an aircraft. Do not use your Headset inside an aircraft.
- To prevent damage to your hearing, please do not set the listening volume too high.
- Do not attempt to modify the Headset.
- Do not keep the Headset near a wash basin or other wet places.
- Do not use the Headset outdoors in the rain.
- Do not use the Headset in stormy weather.
- Do not clean the Headset while it is being charged. Always disconnect the charger from the Headset before cleaning.
- Do not attempt to force open the built-in battery.
- Only charge the Headset's built-in battery in accordance with the instructions described in this user guide.

Care and Maintenance

Headset
- Turn off your Headset before placing it in your pocket or bag. If the MFB is accidentally depressed, your mobile phone may place an unintended call.
- Do not keep to submerge your Headset in liquid or try to wash in any circumstance more than 5 minutes.
- Do not use abrasive cleaners to clean the Headset.
- Do not expose the Headset to extremely high or low temperatures.
- Do not leave the Headset in direct sunlight for an extended period of time.
- Do not leave the Headset near open flames such as cooking burners.
- Do not dispose of the Headset in a fire, as it will result in explosion.
- Do not bring the Headset into contact with any sharp objects, as this will cause scratches and damages.
- Do not stick anything inside the Headset, as this may damage internal components.
- Do not attempt to disassemble the Headset as it does not contain serviceable components.
- If you do not plan to use the Headset for a long period, please store it in a dry place that is free from extreme temperatures and dust.
- Avoid charging the Headset in extremely high or low temperatures.
- Dispose of the battery and the Headset according to local regulations. Do not dispose of them as household waste.

Built-in Battery
- Do not attempt to replace the Headset's battery as it is in-built and is not changeable.
- Dispose of the battery according to local regulations. Do not dispose of the battery as household waste.
- Charge the battery in accordance with the instructions supplied with this user guide.

Charger
- Use only the USB cable supplied by the Headset's original manufacturer to charge the Headset. Other USB cable may look similar but using them could be dangerous and could damage the Headset.
- Do not attempt to disassemble the charger as it may expose you to dangerous voltages or other risks. Incorrect reassembly can cause electric shock when the Bluetooth cable is subsequently used.
- Do not use the charger outdoors or in damp areas.

Notes on Environmental Protection

After the implementation of the European Directive 2012/19/EU in the national legal system, the following applies: Electrical and electronic devices must not be disposed of with domestic waste. Consumers are obliged by law to return electrical and electronic devices at the end of their service lives to the public collection points that are set up for this purpose or designated points of sale. However, such details are defined by the national law of the respective country. This symbol on the product, the instruction manual or the packaging indicates that the product is subject to these regulations. By recycling, reusing the materials, or other forms of utilizing old devices, you are making an important contribution in protecting our environment.

Troubleshooting

Q: I can't hear anything in my Headset.
A:
- Ensure the Headset is turned on and is properly charged.
- Ensure the Headset is properly paired with the mobile phone.
- Make sure that the mobile phone is connected with the Headset – if it does not connect, either refer to the mobile phone's Bluetooth menu or by pressing the MFB once (see "Using Your Headset" and "Pairing Your Headset with a Bluetooth Mobile Phone").

Q: I can't connect my Headset with my mobile phone.
A:
- Ensure your Headset is turned off and is properly charged.
- Ensure the Headset is properly paired with your mobile phone.
- Ensure the Headset is within ten meters range of your mobile phone and there are no obstructions, such as walls or other electronic devices in between.

EN FCC RF Radiation Exposure Statement

This equipment complies with FCC radiation exposure limits set forth for an uncontrolled environment. End users must follow the specific operating instructions for satisfying RF exposure compliance. This transmitter must not be co-located or operating in conjunction with any other antenna or transmitter.

Federal Communications Commission (FCC) Statement
This device complies with Part 15 of the FCC Rules. Operation is subject to the following two conditions: (1) this device may not cause harmful interference, and (2) this device must accept any interference received, including interference that may cause undesired operation.
Changes or modifications not expressly approved by the party responsible for compliance could void the user's authority to operate the equipment.

15.21 You are cautioned that changes or modifications not expressly approved by the part responsible for compliance could void the user's authority to operate the equipment.

15.105(b) This equipment has been tested and found to comply with the limits for a Class B digital device, pursuant to part 15 of the FCC rules. These limits are designed to provide reasonable protection against harmful interference in a residential installation. This equipment generates, uses and can radiate radio frequency energy and, if not installed and used in accordance with the instructions, may cause harmful interference to radio communications. However, there is no guarantee that interference will not occur in a particular installation. If this equipment does cause harmful interference to radio or television reception, which can be determined by turning the equipment off and on, the user is encouraged to try to correct the interference by one or more of the following measures:

- Reorient or relocate the receiving antenna.
- Increase the separation between the equipment and receiver.
- Connect the equipment into an outlet on a circuit different from that to which the receiver is connected.
- Consult the dealer or an experienced radio/ TV technician for help.

If the above steps do not solve your problem, please recharge the Headset and remove your mobile phone's battery for a while.

i.Tech Dynamic Global Distribution Limited.
All rights in this publication are reserved and no part may be reproduced without the prior written permission of the publisher. The contents of this publication are believed to be correct at the time of going to press, but any information, specifications, products or services mentioned, and product I.D. shown may be modified, supplemented or withdrawn without further notice. The Stylized i.Tech logos are trademarks owned by i.Tech Dynamic Global Distribution Limited or its affiliates. All other trademarks or registered trademarks belong to their respective owners.
Bluetooth® and the Bluetooth logos are trademarks owned by Bluetooth SIG, Inc, USA and licensed to i.Tech Dynamic Global Distribution Limited.
i.Tech declares under our sole responsibility that the Headset is in conformity with the provisions of the following Council Directives: 2014/53/EU

繁中 1. 關於您的 ProStereo™ H2

a. 多功能按鈕（**MFB**）
   - 開機 / 關機
   - 與行動電話配對
   - 接聽 / 結束來電
b. 音量增加鈕
c. 音量減少鈕
d. 狀態指示燈
e. **USB** 充電插座
f. 內建式麥克風

2. 藍牙耳機充電

藍牙耳機內置可再充電電池。在第一次使用藍牙耳機前，建議先為藍牙耳機完全充電。
將充電器插頭插入藍牙耳機的USB充電插座，然後將充電器連接至交流電源插座或個人電腦／手提電腦之中。
請僅使用隨附的充電器 / USB 充電線，為藍牙耳機充電。

藍牙耳機狀態	狀態指示燈光
低電量	每3分鐘閃動紅色 3 次及發出「電量低」提示音
充電中	純紅色
完全充電	關閉

需要大約 2小時的時間，才能將藍牙耳機充滿電量。

＊ 警告： 請勿在藍牙耳機連接至充電器時使用藍牙耳機。

3. 將藍牙耳機與藍牙行動電話配對

1) 確保藍牙耳機已關閉。
2) 如要啟動配接模式，請按住藍牙耳機的MFB鍵 6 秒，直至狀態指示燈交替閃動藍色和紅色。
3) 啟動流動電話的藍牙功能，搜尋藍牙設備，然後選擇 "ProStereo H2"，並輸入密碼 "0000"。當配接完成後，藍牙耳機的狀態指示燈會亮著藍色燈2秒，並會聽到「手機已連接」的提示音（語音提示語言設定須選擇為中文）。

繁中 4. 基本操作

功能	按鈕	嗶聲/語音提示	狀態指示燈
開機	按住MFB 約 3 秒鐘	「開機」	閃動藍燈3次
當您第一次開啟藍牙耳機時，藍牙耳機會進入配對模式，意即狀態指示燈會交替閃爍藍、紅燈，如此您可以立即將藍牙耳機與裝置進行配對。			
關機	按住MFB 約 3 秒鐘	「關機」	顯示紅燈 約 2 秒鐘
接聽 / 結束來電	按一次MFB	– –	– –
重撥最後號碼	連按 MFB 兩次	短嗶聲	– –

功能	按鈕	嗶聲/語音提示	狀態指示燈
語音撥號	於待機狀態下按音量增加鈕 ✚ 1 次	短嗶聲	– –
設定語音提示語言	待機模式下同時長按下音量增加鈕 ✚，音量減少鈕 ━ 及MFB	短嗶聲	閃動紫燈3次
音量增加	按音量鈕 ✚ 一次	– –	– –
音量減少	按音量鈕 ━ 一次	– –	– –

ProStereo H2 是由 Sony LDAC™/ Qualcomm® aptX™ HD / Qualcomm® aptX™ 驅動。
Sony LDAC / Qualcomm aptX HD / Qualcomm aptX 是採用無線藍牙技術，配合內置專業級的 AKM™ DAC 芯片，能於聆聽音樂和觀賞電影時提供更清晰的音訊。
Qualcomm aptX HD 音訊技術可確保支持無線藍牙的裝置能夠提供高清 (HD) 音訊。此項技術可在音訊傳輸時保護音訊數據，提供 "優於CD" 的聆聽體驗。
LDAC 是 Sony 開發的音訊編碼技術，即使透過藍牙連線，也可以傳輸 High Resolution (Hi-Res) Audio 內容。不像 SBC 等其他藍牙相容編碼技術，運作時不需要下行轉換 Hi-Res Audio內容 (*)，透過藍牙無線網路的資料傳送量約比其他技術多三倍 (**)，音質無與倫比，這都要歸功於高效編碼和最佳化分包。

＊ 不包括 DSD 格式內容
＊＊ 選擇 990kbps (96/48kHz) 或 909kbps (88.2/44.1kHz) 位元速率時與 SBC 相比手機或音訊裝置支援時，Sony LDAC / Qualcomm aptX HD / Qualcomm aptX 音訊將自動啟用。
Sony LDAC / Qualcomm aptX HD 音訊支援 24-bit 音頻，讓您可以享受到錄音室般音質的聲音。

功能	按鈕	嗶聲/語音提示	狀態指示燈
下一首音樂	長按音量鈕 ✚ 一次	– –	– –
上一首音樂	長按音量鈕 ━ 一次	– –	– –
音效設定	音樂模式下按音量鈕✚及MFB	短嗶聲	紅燈亮起 1 秒鐘
	正常音效為預設設定. 每次設定會提供以下音效改變： 正常 → 重低音 → 搖滾 → 爵士樂 → 正常		

雙待機多方配接技術讓您可同時將兩部流動電話配接。
配接程序：
1. 把你的藍牙耳機與第一部電話配接，然後關閉。
2. 為第二部電話重複配接程序。
3. 使用電話功能表，把第一部電話與藍牙耳機重新配接。

註：開啟/關閉多點連接配對：在待機模式狀態下（未連接設備），按住 MFB 及音量「增加/減少」按鈕約 3 秒鐘，待聽到 4 聲增強/減弱聲音後鬆開。

ProStereo™藍牙耳機是專門設計與藍牙裝置搭配使用。由於不同製造商提供種類繁多的藍牙裝置，因此無法完全保證藍牙耳機可與啟用藍牙的產品之間能互通。

繁中 5. 音樂共享

ProStereo H2 無線耳機支援音樂分享功能。這允許一台音樂播放中的 ProStereo H2 無線耳機透過藍牙分享音樂到另一台的 ProStereo H2 無線耳機。而那台接收的 ProStereo H2 無線耳機也可同時享受發送的 ProStereo H2 無線耳機所體驗得到的高音質 Hi-Fi 音頻效果。(見圖 Ⓑ)
要啟動音樂分享功能，發送的 ProStereo H2 無線耳機 (A) 及接收的 ProStereo H2 無線耳機 (B)都必須要先處於待機模式狀態，如其中 A 無線耳機或 B 無線耳機已經處於音樂串流狀態下，音樂分享初始化功能便無法啟動。
音樂共享初始化步驟如下:
1. 長按 A 無線耳機的音量減少鈕（ ━ ）3秒鐘，狀態指示燈便會顯示為紫色呼吸燈及發出一聲長嗶聲以靜待連接至 B 無線耳機。
2. 長按 B 無線耳機的音量增加鈕（ ✚ ）3 秒鐘，狀態指示燈便會顯示為紫色呼吸燈及發出一聲長嗶聲以靜待跟 A 無線耳機連線。
3. 如音樂共享成功設定，A 無線耳機和 B 無線耳機便會互相連接，無線耳機會發出「已連接」的提示音確認。
4. 現在當 A 無線耳機播放音樂時，B 無線耳機也會同時收聽到同一首音樂。當無線耳機於音樂共享狀態下播放音樂，A 無線耳機的狀態指示燈便會顯示為藍色呼吸燈效果，而B 無線耳機的狀態指示燈便會顯示為藍色呼吸燈效果。

繁中 安全指引

- 駕駛時請先查閱當地有關使用手提電話及藍牙耳機的法例。使用本藍牙耳機時，必須保持集中，注意路面情況。為閣下安全著想，請小心駕駛。可考慮先把車輛停泊于路旁，再撥打或接聽電話。
- 切勿把本藍牙耳機放在車內安全氣袋的位置上，因為當安全氣袋彈出時，可能會引致嚴重的傷害。
- 切勿讓兒童玩耍本藍牙耳機，細小的零件可能令兒童有窒息的危險。
- 醫院、爆破地點或潛在爆炸環境的地方，可能會要求用戶關掉電子器材及無線電裝置。當進入特定範圍內時請留意有關指示。
- 登機前請先把藍牙耳機關掉，在飛機內不可使用本藍牙耳機。
- 為閣下聽覺著想，請勿把音量調得太大。
- 切勿試圖對本藍牙耳機作出任何修改。
- 切勿把本藍牙耳機放置在洗手盆或其他潮濕的地方。
- 切勿在雨中使用本藍牙耳機。
- 切勿在颱風時使用本藍牙耳機。
- 當處於充電狀態時，請勿清潔本藍牙耳機。應先把藍牙耳機及充電器分開，再進行清理。
- 切勿強行打開本藍牙耳機的內置電池。
- 請依照本說明書上的方法，進行內置電池的充電。

護理及保養

藍牙耳機
- 將藍牙耳機放進口袋或手提袋前，請先關閉藍牙耳機。如果誤按多功能按鍵，您的手機可能會意外撥號。
- 因為藍牙耳機是不防水的，切勿让藍牙耳機浸於任何液體及沖洗超過5分鐘。
- 切勿使用具磨蝕性的清潔劑清理藍牙耳機。
- 切勿將藍牙耳機暴露在溫度過高或過低的地方。
- 切勿讓藍牙耳機長時間受陽光直接照射。
- 切勿讓藍牙耳機靠近明火，如煮食爐。
- 切勿棄置藍牙耳機於火中，因為這將導致爆炸。
- 切勿讓藍牙耳機接觸到任何尖銳的物體，因為這會造成劃痕和損毀。
- 切勿在藍牙耳機內戳刺任何物品，因為這可能會損害內部零件。
- 切勿嘗試拆開藍牙耳機，因為它並不包含任何維修組件。
- 如果長時期內不打算使用藍牙耳機，請你將它儲存在乾燥的地方，避免極端的溫度和灰塵。
- 避免在溫度過高或過低的地方為藍牙耳機充電。
- 請根據地方法規棄置電池和藍牙耳機。不要將它當作家居廢物般棄置。

內置電池
- 切勿嘗試更換藍牙耳機的電池，因為它是內置的，且不能更換。
- 請根據地方法規棄置電池。不要將它當作家居廢物般棄置。
- 請按照本用戶指南附有的指示替電池充電。

充電器
- 請使用藍牙耳機製造商提供的原裝充電器，使用其他品牌的充電器可能會損毀藍牙耳機，甚至構成危險。
- 由於在拆解充電器時可能會接觸到高壓電流或構成其他危險，請勿嘗試拆解充電器。使用不正確組裝的充電器會引致觸電危險。
- 請勿在戶外或潮濕地方使用充電器。

繁中 疑難排解

問: 我的藍牙耳機沒有聲音。
答:・ 請確保藍牙耳機已啟動並完全充電。
・ 請確保藍牙耳機與流動電話妥善配接。
・ 請確保藍牙耳機與流動電話妥善地連接 — 如未能連接，請參照流動電話的藍芽功能表，或按MFB一次。(請參閱「使用藍牙耳機」及「將藍牙耳機與流動電話配接」 一節)。

問: 我不能把藍牙耳機與流動電話連接。
答:・ 請確保藍牙耳機已啟動並適當充電。
・ 請確保藍牙耳機與流動電話適當配接。
・ 請確保流動電話的藍芽裝置已被啟用。詳細操作說明請參考流動電話用戶使用說明。
・ 請確保藍牙耳機位於流動電話的 1 0 米範圍之內，而當中並沒有任何障礙物，例如牆壁或其它電子器材等。

如以上步驟未能解決問題，請重新把藍牙耳機充電並把電池從手機取出一會。

愛達克環球有限公司
所有在本刊物的資料均具有版權，沒有印刷商的書面同意，不得作出任何翻印。在印刷前，所有在本刊物的內容均屬真實正確，但任何資料、規格、產品或提及的服務，以及展覽的產品I.D. 可能會修改、補充或撤銷或未事先通知。
時尚的I.Tech標記是愛達克環球有限公司或其附屬公司擁有的商標。所有其他商標或注冊商標屬於相應的擁有者。
Bluetooth® 和藍芽商標是屬於Bluetooth SIG, Inc, USA擁有的商標並授權予i.Tech Dynamic Global Distribution Limited。
i.Tech 聲明在其唯一的責任下，本藍牙耳機是符合下列委員會指令的條款：2014/53/EU

FCC RF輻射暴露聲明

本器材符合在不受控制環境下的FCC輻射暴露限制。最終用戶必須跟從特定的操作指引以符合RF暴露的要求。傳送器不能與任何天線或發射器共同放置。

15.105(b) 根據FCC條例第15部份規定，本器材已經測試並符合B類數碼設備的限制。這些限制經特別設計，可以提供合理的保護以防止在家居安裝時出現的有害干擾。本器材能產生、使用和放射無線電頻率能量。若未根據指示進行安裝和使用，可能對無線通訊作出有害的干扰，但是，我們不能保證干擾會在某一安裝地點發出。若本器材真的對收音機或電視接收作出有害干扰，用戶可將器材開啟和關閉以決定這些是否干扰的源头。我們建議閣下可嘗試下列一種或多種的方法以減少干扰的程度：

- 重新轉動或擺放天線位置。
- 增加本器材与接收器的距離。
- 將本器材插進與接收器不同的其他電源插座。
- 請諮詢零售商或具經驗的收音機/電視維修員尋求協助。

簡中 1.关于您的 ProStereo™ H2

a. 多功能按钮（**MFB**）
   - 开机 / 关机
   - 与行动电话配对
   - 接听 / 结束来电
b. 音量增加钮
c. 音量减少钮
d. 状态指示灯
e. **USB** 充电插孔
f. 内置麦克风

2. 蓝牙耳机充电

蓝牙耳机随附内建式充电电池。 第一次使用蓝牙耳机之前，建议您将电池充饱电量。
将充电器的插头插入 USB 充电插槽，并将主充电器插入 AC 墙壁插座或插入个人计算机 / 笔记型计算机。
请仅使用随附的充电器 / USB充电线，为蓝牙耳机充电。

蓝牙耳机状态	状态指示灯光
低电量	每3分钟闪动红色 3 次及发出「电量低」提示音
充电中	红光
已充饱电	关闭

需要大约 2小时的时间，才能将蓝牙耳机充饱电量。

＊ 警告： 请勿在蓝牙耳机连接至充电器时使用蓝牙耳机。

3. 将蓝牙耳机与蓝牙行动电话配对

1) 确保蓝牙耳机关闭。
2) 如果要启动配对模式，请按住蓝牙耳机的MFB 按钮 6 秒钟，直至状态指示灯交替地闪烁蓝光和红光。
3) 启动手机的蓝牙功能，搜索蓝牙装置，选择"ProStereo H2"，然后输入密码 " 0000 "。当配对完成时，蓝牙耳机的状态指示灯会亮着蓝色灯2秒，并会听到「手机已连接」的提示音（语音提示语言设定须选择为中文）

简中 4. 基本操作

功能	按钮	哔声 / 语音提示	状态指示灯
开机	按住MFB 约 3 秒钟	「开机」	闪动蓝灯3次
当您第一次开启蓝牙耳机时，蓝牙耳机线会进入配对模式，意即状态指示灯会交替闪烁蓝、红灯，如此您可以立即将蓝牙耳机线与装置进行配对。			
关机	按住MFB 约 3 秒钟	「关机」	显示红灯 约 2 秒钟
接听 / 结束来电	按一次MFB	– –	– –
最后号码重拨	连按 MFB 两次	短哔声	– –

功能	按钮	哔声 / 语音提示	状态指示灯
语音拨号	于待机状态下按音量增加钮 ✚ 1 次	短哔声	– –
设定语音提示语言	待机模式下同时长按下音量增加钮 ✚，音量减少钮 ━ 及MFB	短哔声	闪动紫灯3次
音量增加	按音量钮 ✚ 一次	– –	– –
音量减少	按音量鈕 ━ 一次	– –	– –

ProStereo H2 是由 Sony LDAC™ / Qualcomm® aptX™ HD / Qualcomm® aptX™ 驱动。
Sony LDAC / Qualcomm aptX HD / Qualcomm aptX 是采用无线蓝牙技术，配合内置专业级的 AKM™ DAC 芯片，可以在听音乐或看电影时提供更清晰的音频。
Qualcomm aptX HD 音频技术可确保支持无线蓝牙的设备能够提供高清 (HD) 音频。此项技术可在音频传输时保护音频数据，提供 "优于 CD" 的聆听体验。
LDAC 是由 Sony 开发的一种音频编码技术，即使透过蓝牙连接，也可实现 High Resolution (Hi-Res) Audio 内容的传输。不同于 SBC 等其他蓝牙兼容编码技术，它在工作时无需对 Hi-Res Audio 内容 (*) 进行任何降频转换，并可借助于高效编码和优化数据分组的方式，以无与伦比的音质通过蓝牙无线网络传输比其他一些技术大约多三倍的数据 (**)。

＊ 不包括 DSD 格式的内容
＊＊ 选择 990kbps (96/48kHz) 或 909kbps (88.2/44.1kHz) 比特率时与 SBC 相比 Sony LDAC / Qualcomm aptX HD / Qualcomm aptX，在有手机或音频设备支持的时候，将自动开启。
Sony LDAC / Qualcomm aptX HD 支持 24-bit 音频，因此，使用无线耳机，你可以享受到录音室般的音效。

功能	按钮	哔声 / 语音提示	状态指示灯
下一首音乐	长按音量钮 ✚ 一次	– –	– –
上一首音乐	长按音量钮 ━ 一次	– –	– –
音效设定	音乐模式下按音量钮✚及MFB	短哔声	红灯亮起 1 秒钟
	正常音效为预设设定. 每次设定会提供以下音效改变： 正常 → 重低音 → 摇滚 → 爵士乐 → 正常		

多点连接允许蓝牙耳机同时和两台手机配对。
配对程序：
1. 按照正常方式将蓝牙耳机和第一台手机配对，然后关闭。
2. 对第二台手机重复此配对步骤。
3. 通过手机菜单重新连接第一台手机和 蓝牙耳机。

注：开启/关闭多点连接配对：在待机模式状态中（未连接设备），按住 MFB 及音量 「增加/减少」按钮约 3 秒钟，并在听到 4 声增强/减弱的声音后松开。

ProStereo™蓝牙耳机是专门设计与蓝牙装置搭配使用。由于不同制造商提供种类繁多的蓝牙装置，因此无法完全保证蓝牙耳机可与启用蓝牙的产品之间能互通。

简中 5. 音乐共享

ProStereo H2 无线耳机支持音乐分享功能。这允许一台音乐播放中的 ProStereo H2 无线耳机透过蓝牙分享音乐到另一台的 ProStereo H2 无线耳机。而那台接收的 ProStereo H2 无线耳机也可同时享受发送的 ProStereo H2 无线耳机所体验得到的高音质 Hi-Fi 音频效果。(见图 Ⓑ)
要启动音乐分享功能，发送的 ProStereo H2 无线耳机 (A) 及接收的 ProStereo H2 无线耳机 (B)都必须要先处于待机模式状态，如其中 A 无线耳机或 B 无线耳机已经处于音乐串流状态下，音乐分享初始化功能便无法启动。
音乐共享初始化步骤如下:
1. 长按 A 无线耳机的音量减少钮（ ━ ）3 秒钟，状态指示灯便会显示为紫色呼吸灯及发出一声长哔声以静待连接至 B 无线耳机。
2. 长按 B 无线耳机的音量增加钮(✚) 3 秒钟，状态指示灯便会显示为紫色呼吸灯及发出一声长哔声以静待跟 A 无线耳机连线。
3. 如音乐共享成功设定，A 无线耳机和 B 无线耳机便会互相连接，无线耳机会发出「已连接」的提示音确认。
4. 现在当 A 无线耳机播放音乐时，B 无线耳机也会同时收听到同一首音乐。当无线耳机於音乐共享状态下播放音乐，A 无线耳机的状态指示灯便会显示为蓝色呼吸灯效果，而B 无线耳机的状态指示灯便会显示为蓝色呼吸灯效果。

简中 安全指引

- 驾驶时请先查阅当地有关使用手提电话及蓝牙耳机的法例。使用本蓝牙耳机时，必须保持集中，注意路面情况。为阁下安全著想，请小心驾驶。可考虑先把车辆停泊于路旁，再拨打或接听电话。
- 切勿把本蓝牙耳机放在车内安全气袋的位置上，因为当安全气袋弹出时，可能会引致严重的伤害。
- 切勿让儿童玩耍本蓝牙耳机，细小的零件可能令儿童有窒息的危险。
- 医院、爆破地点或潜在爆炸环境的地方，可能会要求用户关掉电子器材及无线电装置。当进入特定范围内时请留意有关指示。
- 登机前请先把蓝牙耳机关掉，在飞机内不可使用本蓝牙耳机。
- 为阁下聽覺著想，請勿把音量調得太大。
- 切勿試圖對本藍牙耳機作出任何修改。
- 切勿把本藍牙耳機放置在洗手盆或其他潮濕的地方。
- 切勿在雨中使用本藍牙耳機。
- 切勿在颱風時使用本藍牙耳機。
- 當處於充電狀態時，請勿清潔本藍牙耳機。應先把藍牙耳機及充電器分開，再進行清理。
- 切勿強行打開本藍牙耳機的內置電池。
- 請依照本說明書上的方法，進行內置電池的充電。

护理及保养

蓝牙耳机
- 将蓝牙耳机放进