GODFREY GROUP

BRTH-12042-D

10ft x 8ft x 3.5ft"H
Tapered Circle Hanging Header

THIS TEMPLATE MAY BE EDITED AND SAVED IN ADOBE ILLUSTRATOR, FEEL FREE TO PLACE YOUR ARTWORK INTO IT FOR SUBMISSION! SEE ARTWORK GUIDELINES ON OUR WEBSITE:
http://www.godfreygroup.com/graphic-specifications.php

50% SCALE

Outside

Text and/or Logos need to follow same curve of the template

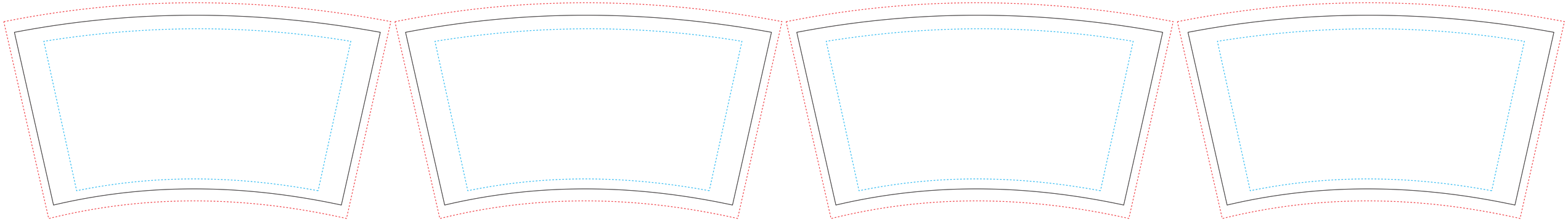

Inside (Optional at additional cost)

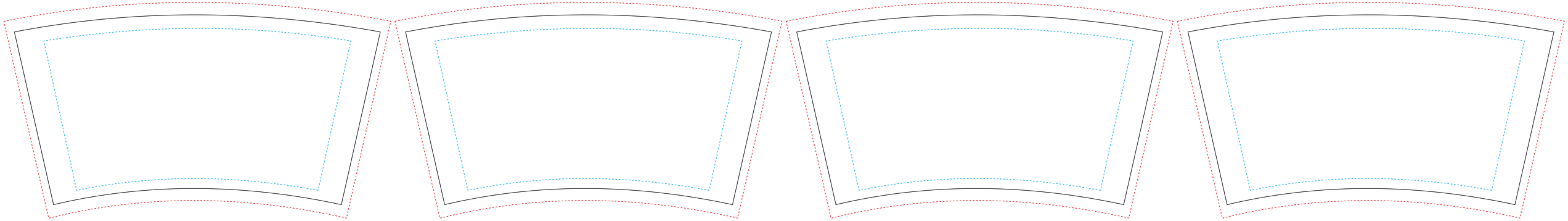

SO # / CLIENT NAME: *0000000 Client Name* / QUANTITY: *1*
MATERIAL: *Dye Sub Fabric* / COLOR MATCH: *CMYK*
GODFREY GROUP GRAPHIC ARTIST: *Artist Name*
FINISHING INSTRUCTIONS: *NA*

Bleed Size: 97.112"W x 54.152"H
Content Safe: Keep important text and graphics within this area

GODFREY GROUP

BRTH-1448-D

12ft x 10ft x 4ft
Tapered Circle Hanging Header

THIS TEMPLATE MAY BE EDITED AND SAVED IN ADOBE ILLUSTRATOR, FEEL FREE TO PLACE YOUR ARTWORK INTO IT FOR SUBMISSION! SEE ARTWORK GUIDELINES ON OUR WEBSITE:
http://www.godfreygroup.com/graphic-specifications.php

25% SCALE

Graphic will be printed (4) times to complete the square.
Continuous graphics may not line up perfectly

Outside

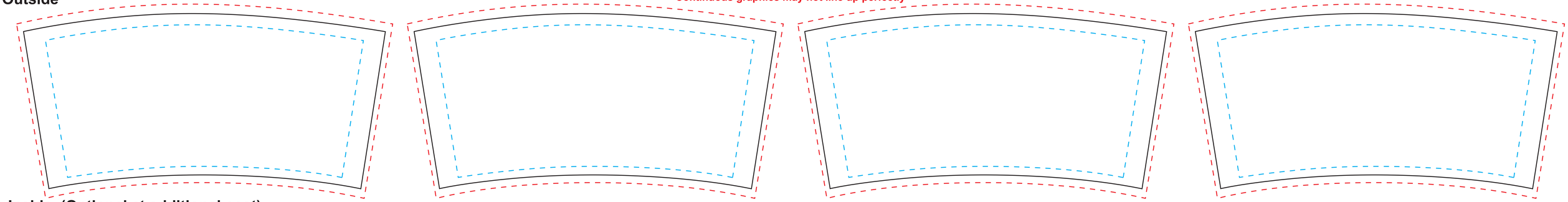

Inside (Optional at additional cost)

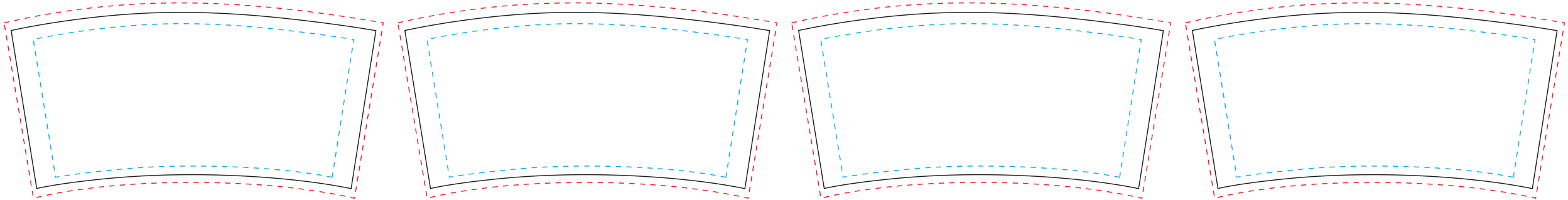

SO # / CLIENT NAME: *0000000 Client Name* / QUANTITY: *1 set*
MATERIAL: *Dye Sub Fabric Graphic* / COLOR MATCH: *CMYK*
GODFREY GROUP GRAPHIC ARTIST: *Artist Name*
FINISHING INSTRUCTIONS: *NA*

Single Panel Size: 115.35”W x 56”H
Single Panel Bleed Size: 120”W x 62”H
Single Panel Safe Area: 101.3”W x 48.7”H
Keep important text an graphics within this area

GODFREY GROUP

BRTH-16848-D

14ft x 12ft x 4ft
Tapered Circle Hanging Header

THIS TEMPLATE MAY BE EDITED AND SAVED IN ADOBE ILLUSTRATOR, FEEL FREE TO PLACE YOUR ARTWORK INTO IT FOR SUBMISSION! SEE ARTWORK GUIDELINES ON OUR WEBSITE:
http://www.godfreygroup.com/graphic-specifications.php

25% SCALE

Graphic will be printed (4) times to complete the square.
Continuous graphics may not line up perfectly

Outside

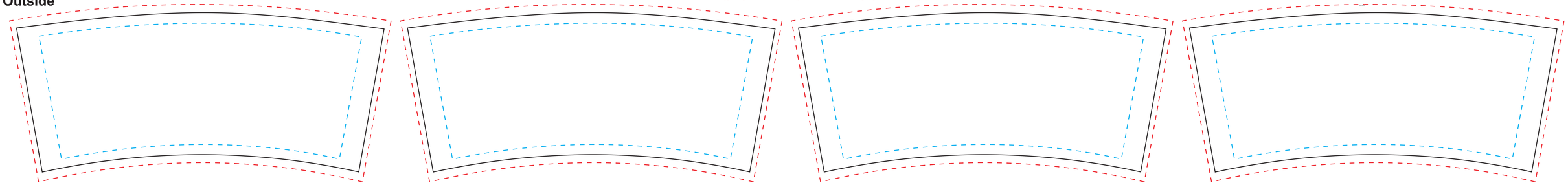

Inside (Optional at additional cost)

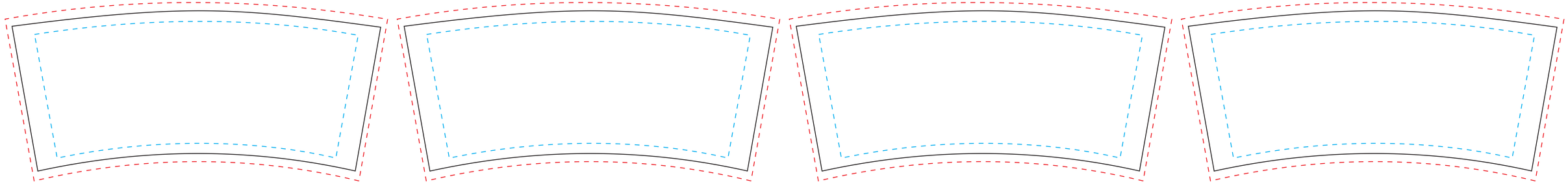

SO # / CLIENT NAME: ***0000000 Client Name*** **/ QUANTITY:** ***4***
MATERIAL: ***Dye Sub Fabric Graphic*** **/ COLOR MATCH:** ***CMYK***
GODFREY GROUP GRAPHIC ARTIST: ***Artist Name***
FINISHING INSTRUCTIONS: ***NA***

Single Panel Size: 128.25”W x 56”H
Single Panel Bleed Size: 133”W x 62”H
Single Panel Safe Area: 112.5”W x 47.5”H
Keep important text an graphics within this area

GODFREY GROUP

BRTH-18048-D

15ft x 13ft x 4ft
Tapered Circle Hanging Header

THIS TEMPLATE MAY BE EDITED AND SAVED IN ADOBE ILLUSTRATOR, FEEL FREE TO PLACE YOUR ARTWORK INTO IT FOR SUBMISSION!
SEE ARTWORK GUIDELINES ON OUR WEBSITE:
http://www.godfreygroup.com/graphic-specifications.php

25% SCALE

Graphic will be printed (4) times to complete the square.
Continuous graphics may not line up perfectly

Outside

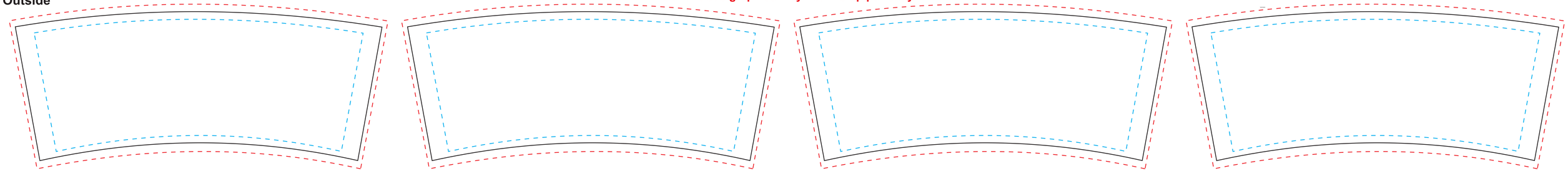

Inside (Optional at additional cost)

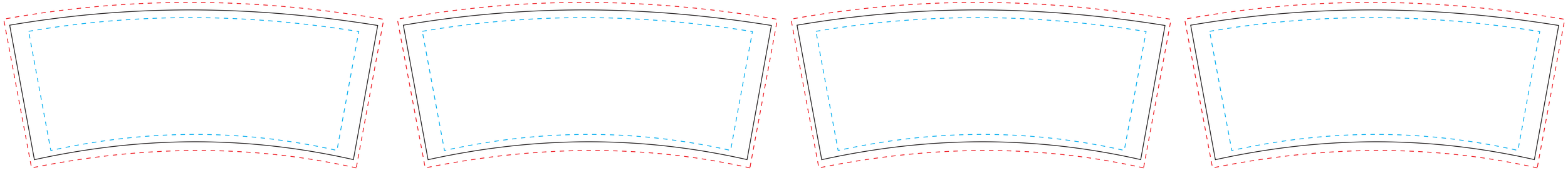

Single Panel Size: 138.5”W x 56.32”H
Single Panel Bleed Size: 143”W x 62.25”H
Single Panel Safe Area: 124.12”W x 50”H
Keep important text an graphics within this area

SO # / CLIENT NAME: ***0000000 Client Name*** / **QUANTITY:** ***4***
MATERIAL: ***Dye Sub Fabric Graphic*** / **COLOR MATCH:** ***CMYK***
GODFREY GROUP GRAPHIC ARTIST: ***Artist Name***
FINISHING INSTRUCTIONS: ***NA***