GODFREY GROUP

2SGT-C

2-Section
Modular Curved Greeting Counter

THIS TEMPLATE MAY BE EDITED AND SAVED IN ADOBE ILLUSTRATOR,
FEEL FREE TO PLACE YOUR ARTWORK INTO IT FOR SUBMISSION!
SEE ARTWORK GUIDELINES ON OUR WEBSITE:
http://www.godfreygroup.com/graphic-specifications.php

100% SCALE

1/2" on each edge is covered by extrusion

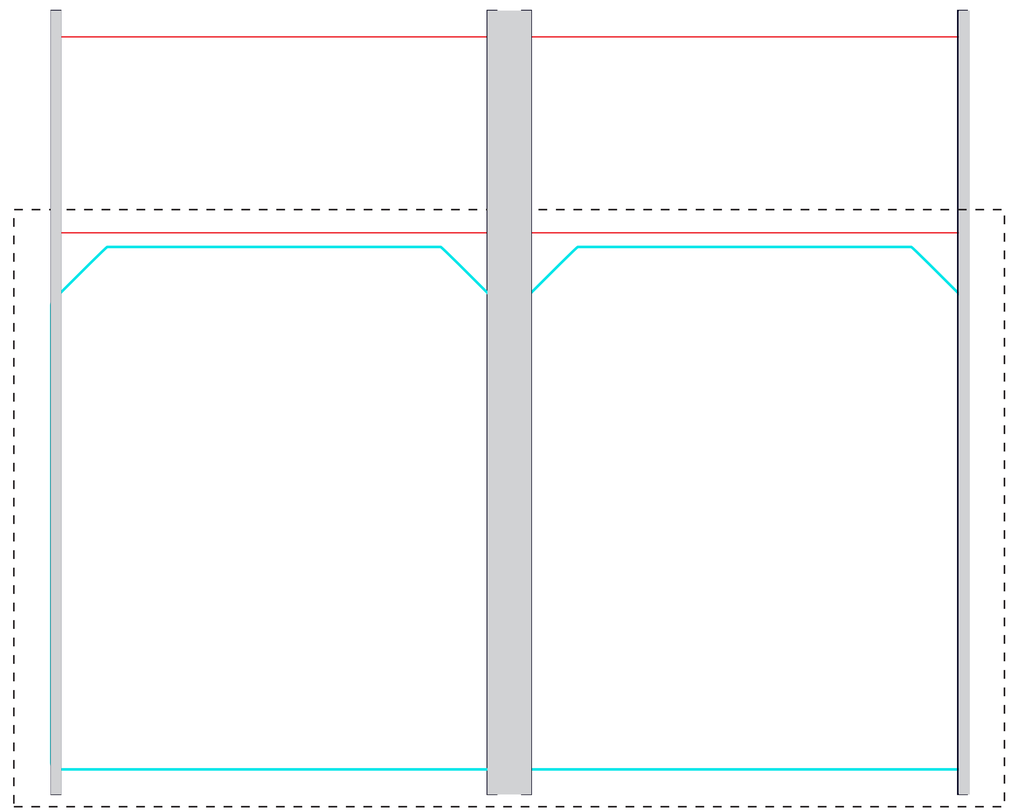

Upper panels= 23.875"w x 10.5"h
Lower panels= 23.875"w x 28"h

Leave 2" overall bleed for printing

SO # / CLIENT NAME: ***0000000 Client Name*** / **QUANTITY:** ***1***
MATERIAL: ***Direct Print to 3mm Sintra*** / **COLOR MATCH:** ***CMYK***
GODFREY GROUP GRAPHIC ARTIST: ***Artist Name***
FINISHING INSTRUCTIONS: ***TBD***

GODFREY GROUP

3SGT-C

3-Section
Modular Curved Greeting Counter

THIS TEMPLATE MAY BE EDITED AND SAVED IN ADOBE ILLUSTRATOR, FEEL FREE TO PLACE YOUR ARTWORK INTO IT FOR SUBMISSION! SEE ARTWORK GUIDELINES ON OUR WEBSITE:
http://www.godfreygroup.com/graphic-specifications.php

100% SCALE

1/2" on each edge is covered by extrusion

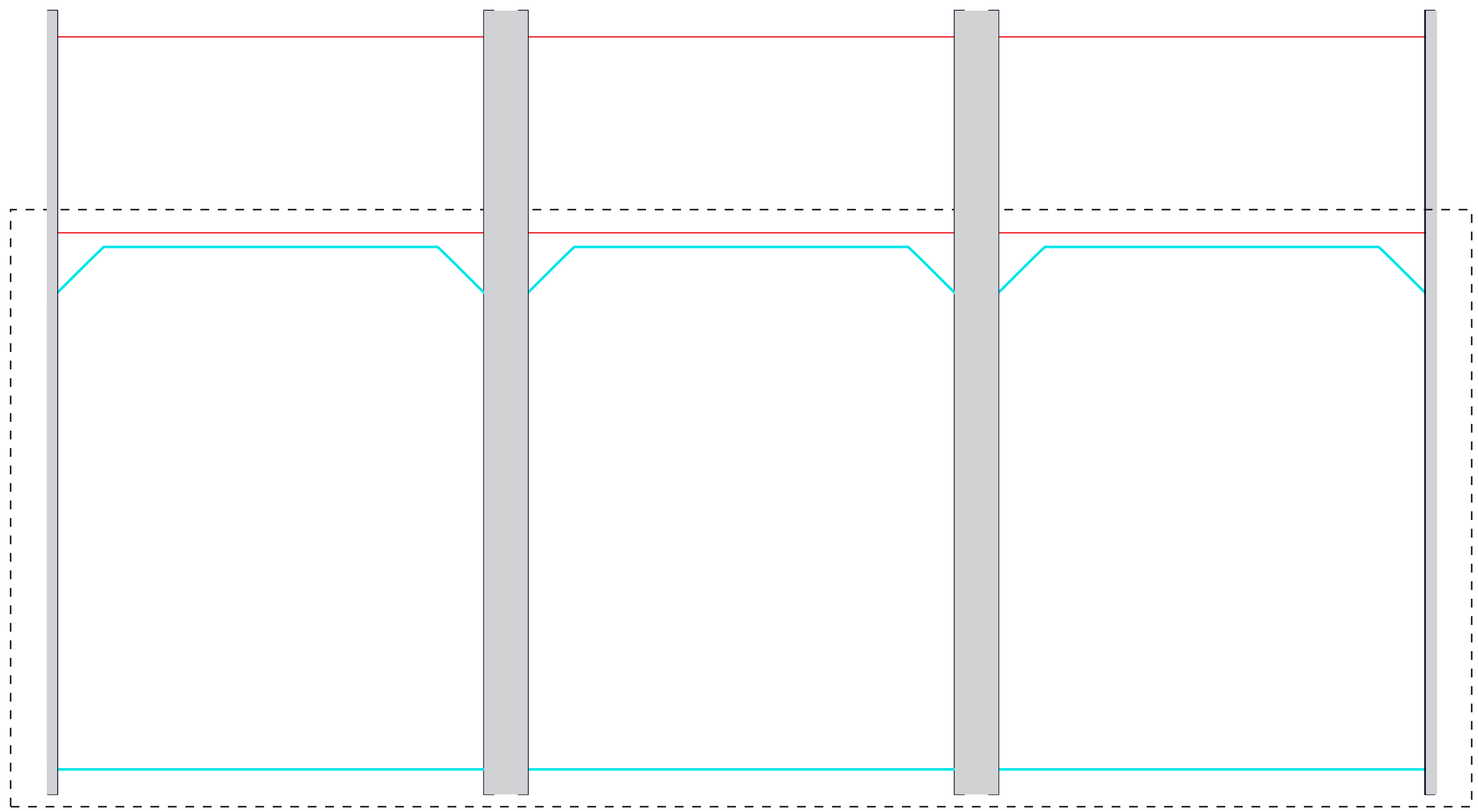

Upper panels= 23.875"w x 10.5"h
Lower panels= 23.875"w x 28"h

Leave 2" overall bleed for printing

SO # / CLIENT NAME: ***0000000 Client Name*** / **QUANTITY:** ***1***
MATERIAL: ***Direct Print to 3mm Sintra*** / **COLOR MATCH:** ***CMYK***
GODFREY GROUP GRAPHIC ARTIST: ***Artist Name***
FINISHING INSTRUCTIONS: ***TBD***

GODFREY GROUP

4SGT-C

4-Section
Modular Curved Greeting Counter

THIS TEMPLATE MAY BE EDITED AND SAVED IN ADOBE ILLUSTRATOR,
FEEL FREE TO PLACE YOUR ARTWORK INTO IT FOR SUBMISSION!
SEE ARTWORK GUIDELINES ON OUR WEBSITE:
http://www.godfreygroup.com/graphic-specifications.php

100% SCALE

1/2" on each edge is covered by extrusion

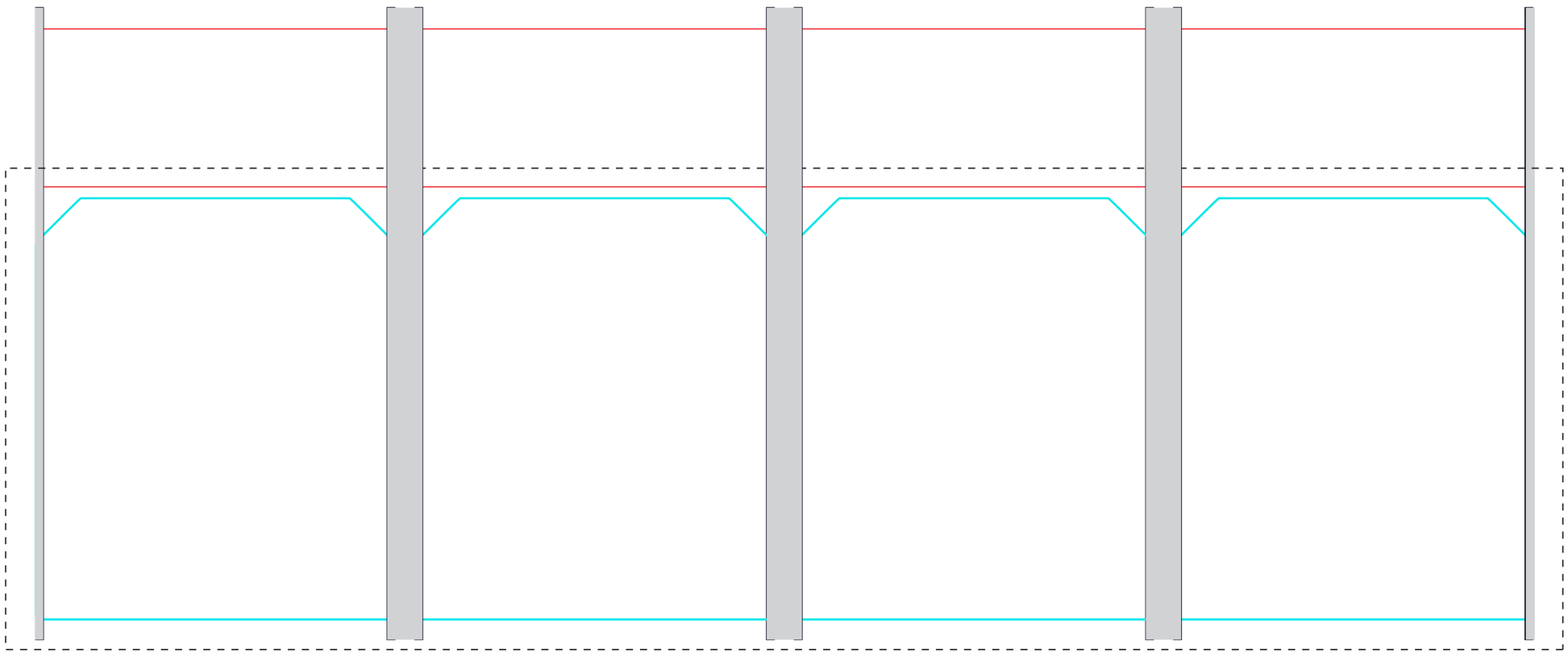

Upper panels= 23.875"w x 10.5"h
Lower panels= 23.875"w x 28"h

Leave 2" overall bleed for printing

SO # / CLIENT NAME: ***0000000 Client Name*** **/ QUANTITY:** ***1***
MATERIAL: ***Direct Print to 3mm Sintra*** **/ COLOR MATCH:** ***CMYK***
GODFREY GROUP GRAPHIC ARTIST: ***Artist Name***
FINISHING INSTRUCTIONS: ***TBD***

GODFREY GROUP

5SGT-C

5-Section
Modular Curved Greeting Counter

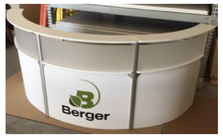

THIS TEMPLATE MAY BE EDITED AND SAVED IN ADOBE ILLUSTRATOR,
FEEL FREE TO PLACE YOUR ARTWORK INTO IT FOR SUBMISSION!
SEE ARTWORK GUIDELINES ON OUR WEBSITE:
http://www.godfreygroup.com/graphic-specifications.php

100% SCALE

1/2" on each edge is covered by extrusion

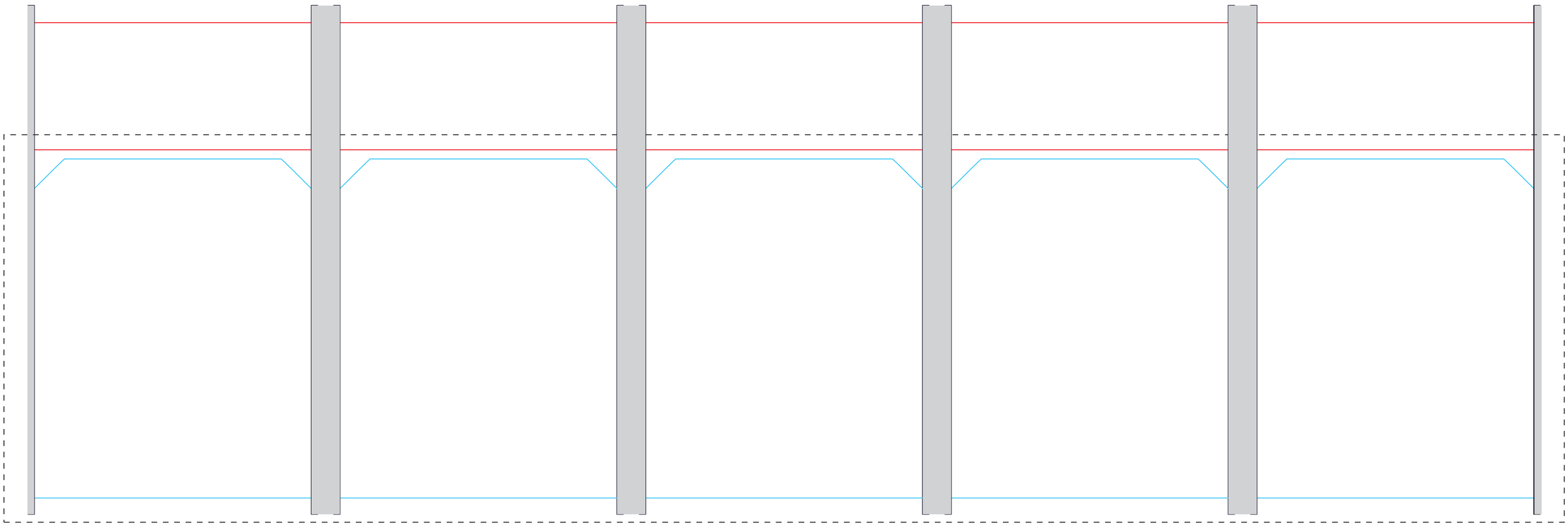

SO # / CLIENT NAME: ***0000000 Client Name*** / QUANTITY: ***1***
MATERIAL: ***Direct Print to 3mm Sintra*** / COLOR MATCH: ***CMYK***
GODFREY GROUP GRAPHIC ARTIST: ***Artist Name***
FINISHING INSTRUCTIONS: ***TBD***

Upper panels= 23.875"w x 10.5"h
Lower panels= 23.875"w x 28"h

Leave 2" overall bleed for printing

GODFREY GROUP

6SGT-C

6-Section
Modular Curved Greeting Counter

THIS TEMPLATE MAY BE EDITED AND SAVED IN ADOBE ILLUSTRATOR,
FEEL FREE TO PLACE YOUR ARTWORK INTO IT FOR SUBMISSION!
SEE ARTWORK GUIDELINES ON OUR WEBSITE:
http://www.godfreygroup.com/graphic-specifications.php

100% SCALE

1/2" on each edge is covered by extrusion

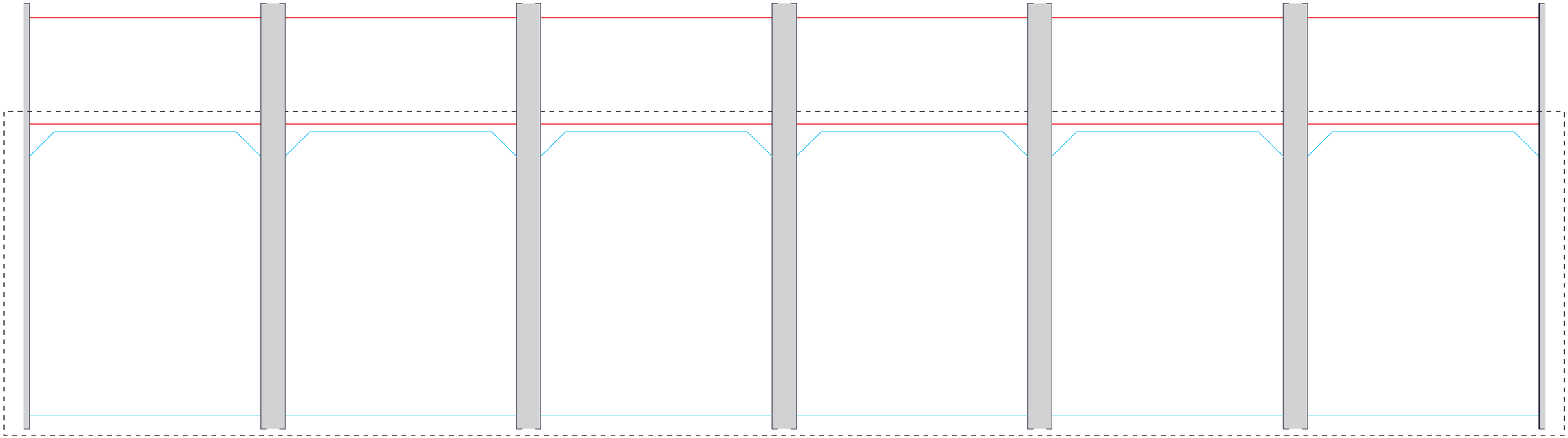

Upper panels= 23.875"w x 10.5"h
Lower panels= 23.875"w x 28"h

Leave 2" overall bleed for printing

SO # / CLIENT NAME: ***0000000 Client Name*** / **QUANTITY:** ***1***
MATERIAL: ***Direct Print to 3mm Sintra*** / **COLOR MATCH:** ***CMYK***
GODFREY GROUP GRAPHIC ARTIST: ***Artist Name***
FINISHING INSTRUCTIONS: ***TBD***