Installation Instructions
MX001214

SlideDriver™— Remote Air Release

Open the control box and identify the components:

- 100 feet (30 meters) tubing
- Actuator/cylinder bracket assembly (1)
- ¼ x 20 bolts x ½-inch and lock washers (3)
- Pressure gauge with tubing and quick disconnect couplings attached
- Spring, tube cutter, hand pump, and threaded quick connect coupling (1 each)

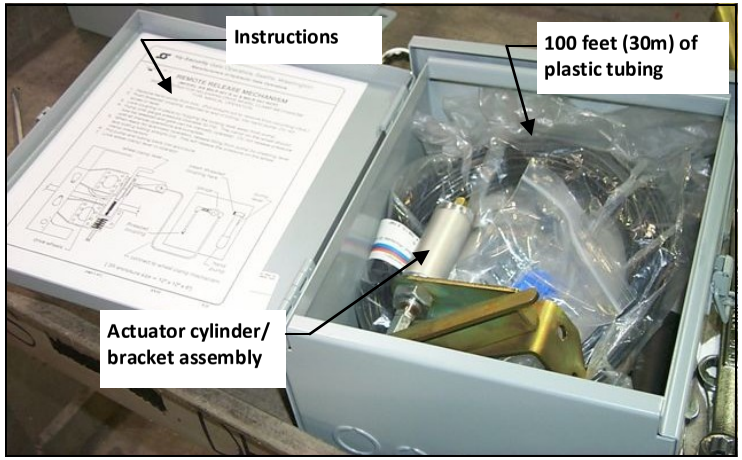

Installation Preparation

1. Install the panel within 100 "hose feet" (30 meters) of the operator.
2. Remove one of the knock outs at the base of the Remote Release Box. Feed the end of the 100' tubing that has the coupling attached through the hole and attach it to the pressure gauge. Run the remainder of the tubing through conduit to the SlideDriver operator.
3. Trim the tubing and attach the "quick connect" coupling.
4. Install the actuator/cylinder bracket assembly onto the SlideDriver and attach the quick disconnect by following steps 1 through 9 on page 2.

SlideDriver Remote Air Release Box

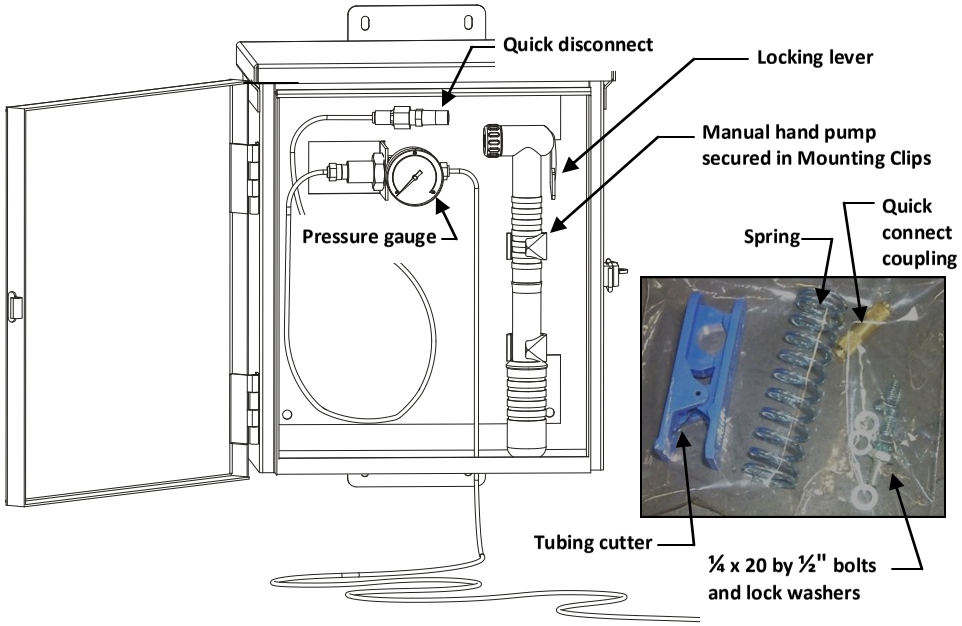

Technical Support

For technical support, call your installer or authorized HySecurity distributor. Obtain the serial number of your operator before calling. For the name of a distributor near you, call HySecurity at 800-321-9947.

P/N MX001214 © 2010 D0086 Rev C

Install the Remote Air Release

1. Remove the SlideDriver cover by loosening the two screws at its base and sliding the cover up and away from the chassis.
2. To attach the actuator cylinder/bracket assembly to the wheel clamp, remove the Nyloc® nut, leave the pivot bolt in place.
2. Place the bracket assembly against the clamp with the pivot bolt extending thru the large hole in the bracket. Reinstall the Nyloc nut on the pivot bolt.
3. Place a lock washer on a ¼ x 20 x ½" bolt and insert it through the lower hole in the bracket and into the wheel clamp (bolt and washer not shown in the photo).
4. Make sure the actuator cylinder/bracket assembly contacts the wheel clamp handle. It needs to be positioned so it pushes against the wheel lock and disengages the wheels when pressure it applied through the Remote Air Release.
5. Install the "quick connect" coupling onto the actuator cylinder. Just push in, it is self locking!
6. Disengage the drive wheels by pulling on the wheel clamp handle.

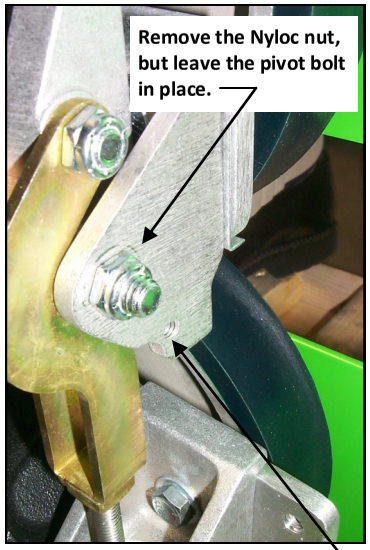

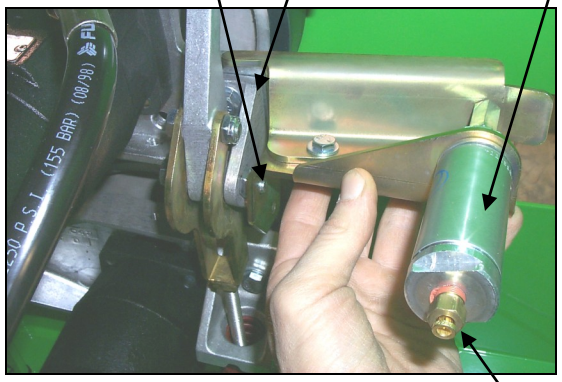

CAUTION

Be careful where you place your hands and fingers when you disengage the drive wheels. The tension spring at the base of the clamp causes the handle to drop suddenly which can cause serious injury.

7. Place a lock washer on each of the remaining two ¼ x 20 x ½" bolts and insert them into the outer holes on the top and bottom wheel mounts.
8. Attach the ends of the compression spring over the bolts and onto the wheel arms. See illustration.
9. Re-engage the wheel clamping device by pushing the wheel clamp up. Make sure the compression spring is properly placed.
10. Follow the instructions on the door of the Remote Air Release box to verify that the Remote Air Release is operating properly.
11. Test the gate operator and replace the SlideDriver cover .

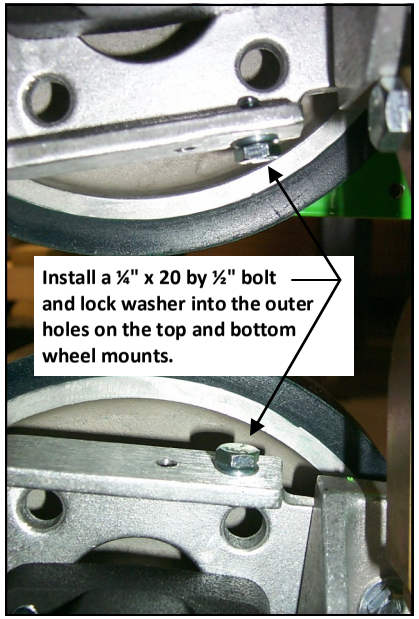

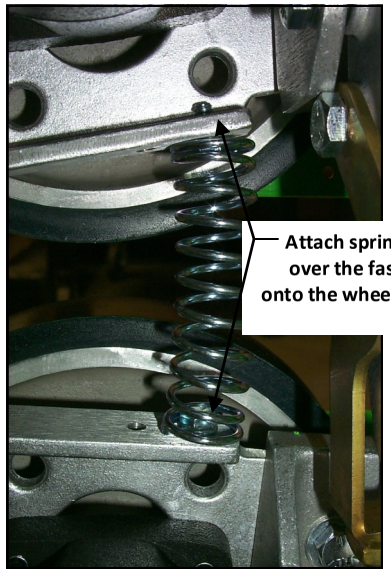

HySecurity
Simple. Reliable. Secure.®

Remote Air Release

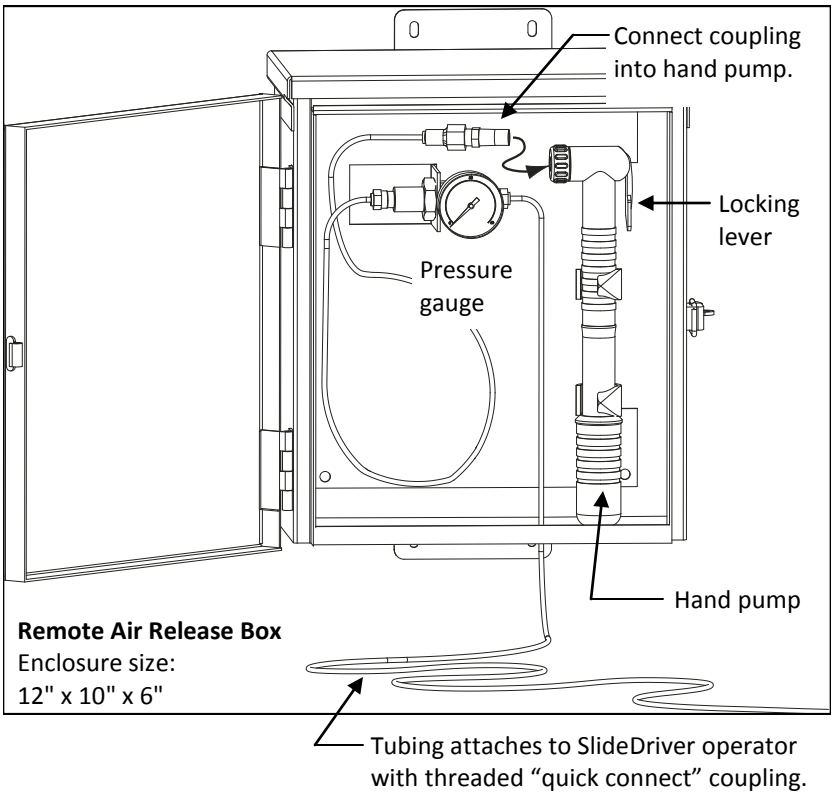

Remote Air Release Box
Enclosure size:
12" x 10" x 6"

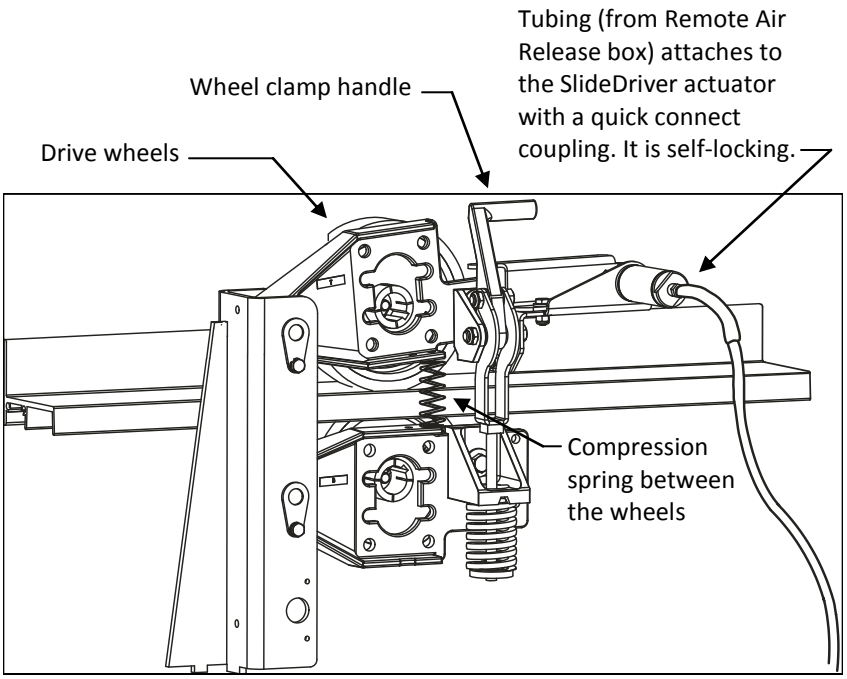

Inside the SlideDriver Operator

Assembling the Hand Pump

1. Remove the hand pump from the box. (Pull straight out to disengage the mounting clips.)
2. Push the threaded coupling into the hand pump. Do not screw or twist it.
3. Lock the coupling in place by pushing the locking lever up so it is horizontal.
4. Extend the base of the hand pump.
5. Pump until gauge pressure indicates 50 psi. This releases the wheel clamp inside the operator. The compression spring will assist in the separation of the wheels.
6. The gate can be manually opened or closed.

   NOTE: Do NOT release pressure until all manual operations are complete.

Return to Automated Gate Operation

1. When you are ready to return to automatic gate operation, lower the locking lever on the hand pump.
2. Disconnect the threaded coupling from the hand pump. Do NOT twist or turn the coupling. Pull it straight out. (Removing the threaded coupling releases pressure on the wheel clamp mechanism.)
3. Place the hand pump and tubing inside the box. Do NOT disconnect the tubing from the pressure gauge.
4. Remove the cover from the SlideDriver chassis and re-engage the wheel clamping device inside the operator by pushing the wheel clamp handle up.
5. Make sure the compression spring is properly placed. The spring ends should be over the fasteners and compressed against the wheel arms. See illustration.
6. Cycle test the gate using the OPEN, CLOSE, and STOP buttons on the keypad.
7. Replace the SlideDriver cover and secure it.

 © 2010