Installation on Concrete Curb

The barrier gate operator bolts to a concrete island or curb.

1. Un-crate the gate. Avoid damaging the cabinet finish.
2. Leave the machine bolted to the bottom pallet until ready to install.
3. Open the cabinet door.
4. Remove the bolts holding the gate to its pallet and place the machine in position on the curb. Refer to your Equipment Layout (EL) drawing for proper positioning of your gate.
5. With a pencil, mark the location of the mounting holes on the concrete.
6. Set the gate aside. Drill all four mounting holes using a 3/4" diameter rotary hammer percussion drill bit. Insert lag screw anchors for 1/2" lag bolts. Place the gate back in position, and anchor it with 1/2" lag bolts and flat washers. Lubricate the bolts before installation. Flat washers have been supplied to go between pavement and cabinet. Linear highly recommends using the corner mounting holes when mounting barrier gates.
7. Proceed with the rest of the installation process.

⚠ WARNING ⚠

The gate must be installed in a location so that enough clearance is supplied between the gate and adjacent structures when opening and closing to reduce the risk of entrapment.

⚠ WARNING ⚠

Do not adjust the force setting to compensate for an improperly installed, improperly functioning, or damaged gate.

⚠ WARNING ⚠

The operator is intended for installation only on gates used for vehicles. Pedestrians must be supplied with a separate access opening. The pedestrian access opening shall be designed to promote pedestrian usage. Locate the gate such that persons will not come into contact with the vehicular gate during the entire path of travel of the vehicular gate.

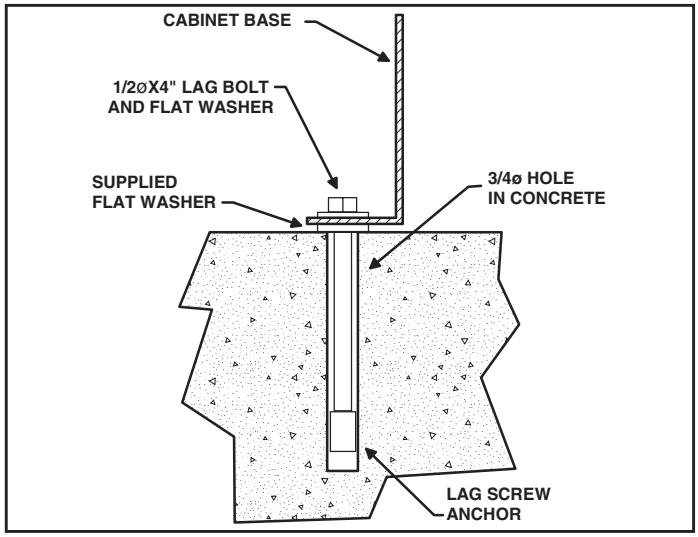

Figure 1. Concrete Lag Anchor Detail

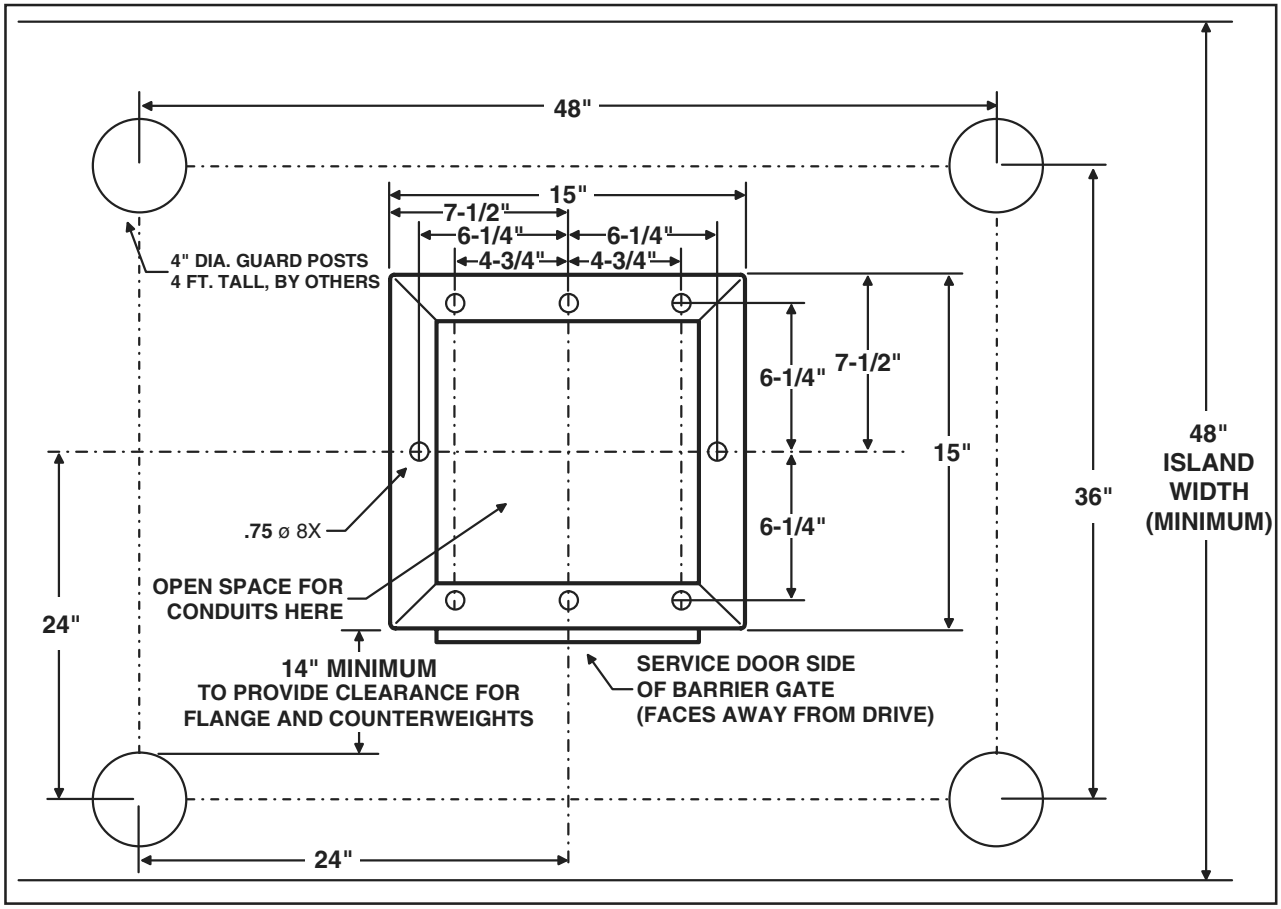

Figure 2. Barrier Gate Mounting Specifications