SUMMERSET

40" Sizzler Professional Grill

Model	SIZPRO40
Cutout Dimensions*	W37 7/8" x H8 1/2" x D20 3/4"
Overall Dimensions*	W39 3/4" X H20" X D25 3/8"
Material	#443 Stainless Steel
Burner Count	5 Main Burners
Total BTU	75,000 BTU
Total Cooking Surface	883 sq. in.
Gas Inlet NG	1/2" NPT Female Regulator
Gas Inlet LP	3/8" Flared Male Fitting

*** Manufacturer Suggested Cutout Dimensions**

**** Manufacturer Approximate Overall Dimensions**

NOTES

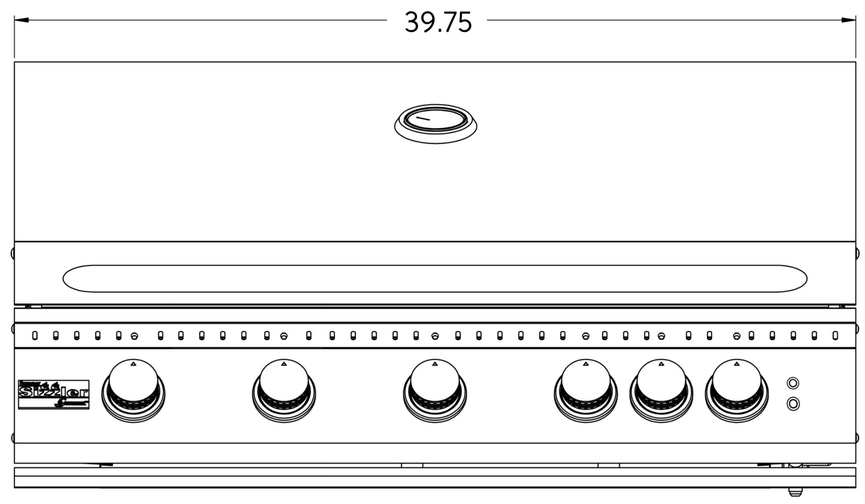

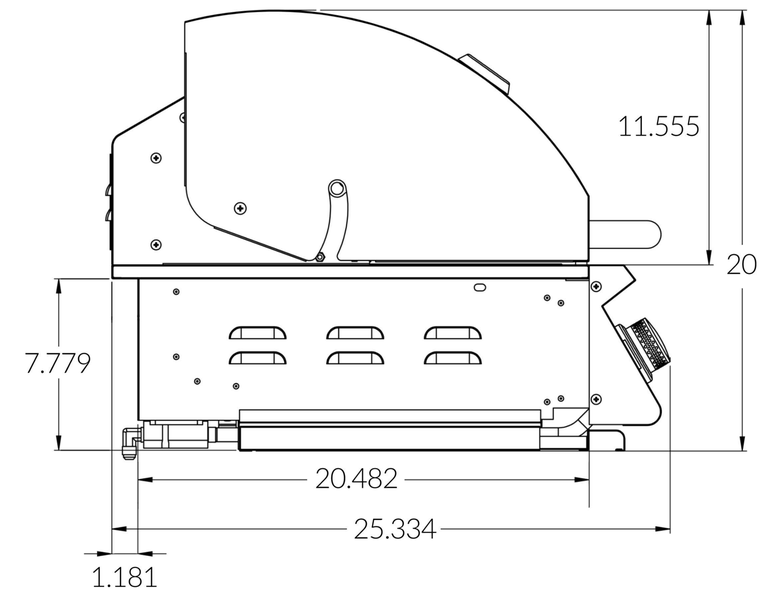

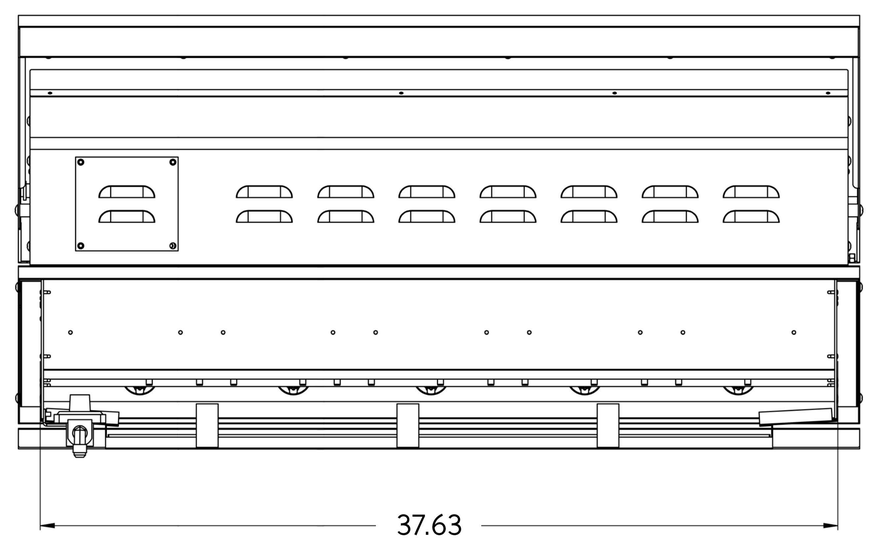

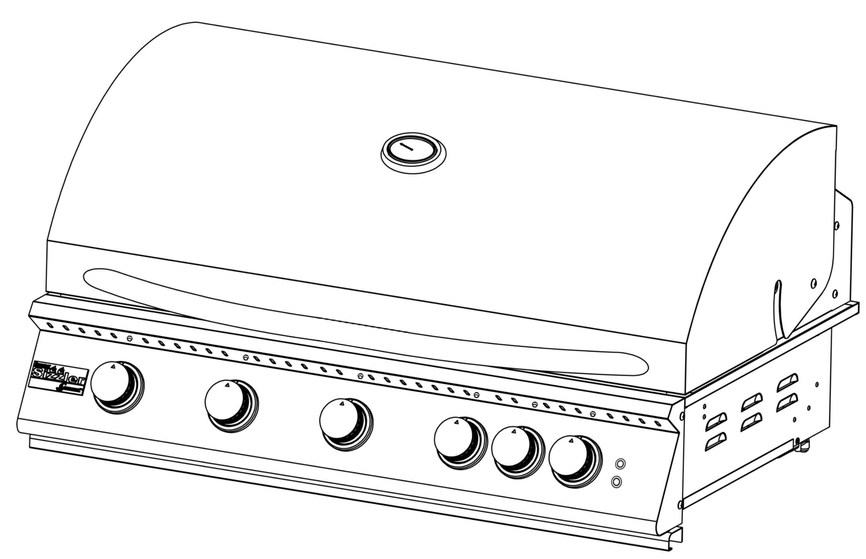

Suggested Cutout Dimensions*
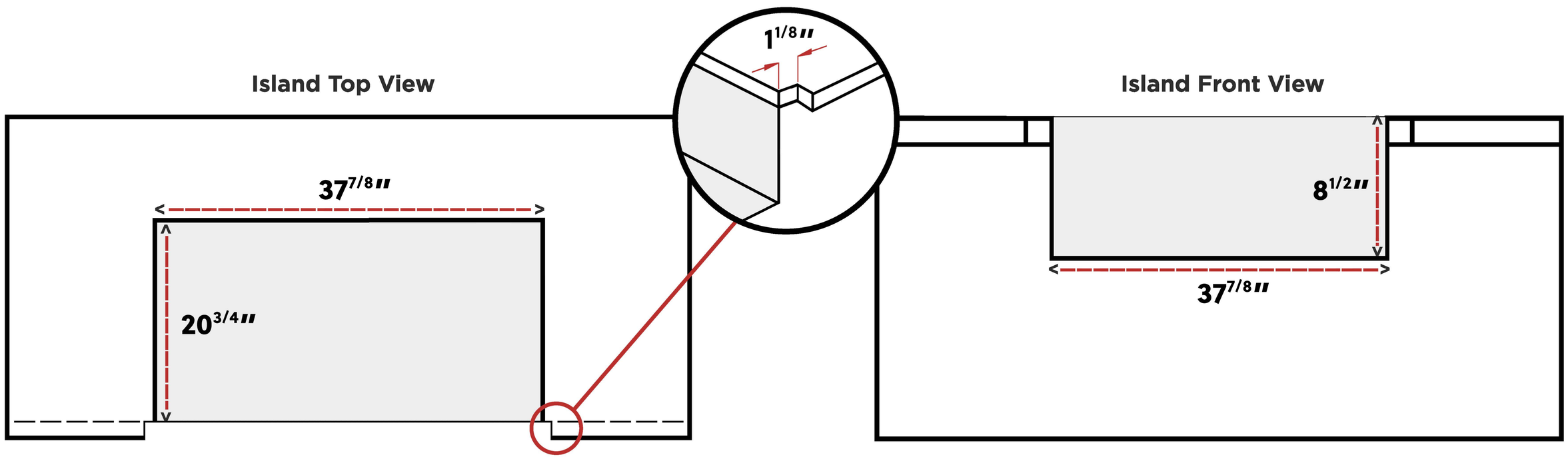
(W) 37 7/8" x (H) 8 1/2" x (D) 20 3/4"