SUMMERSET

32" Sizzler Grill

Model	SIZ32
Cutout Dimensions*	W30 5/8" x H8 1/2" x D20 3/4"
Overall Dimensions*	W32 1/2" X H20" X D25 3/8"
Material	#443 Stainless Steel
Burner Count	4 Main Burners
Total BTU	63,000 BTU
Total Cooking Surface	715 sq. in.
Gas Inlet NG	3/8" NPT Female Regulator
Gas Inlet LP	3/8" Flared Male Fitting

*** Manufacturer Suggested Cutout Dimensions**

**** Manufacturer Approximate Overall Dimensions**

Notes

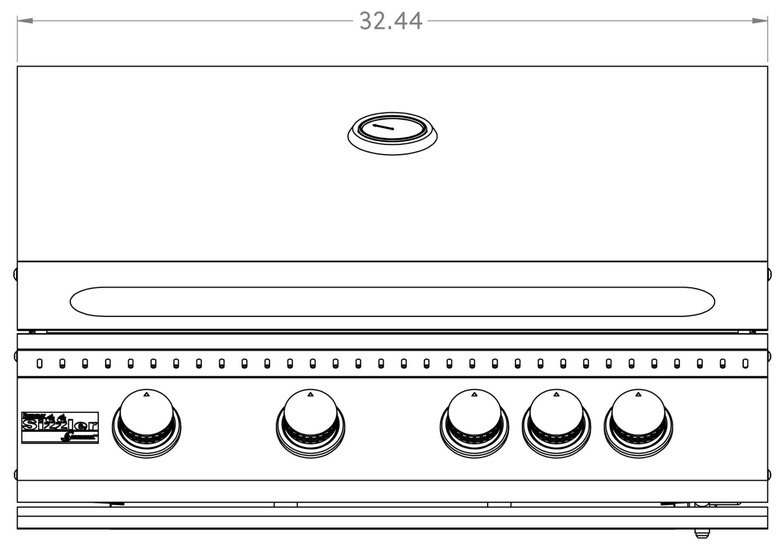

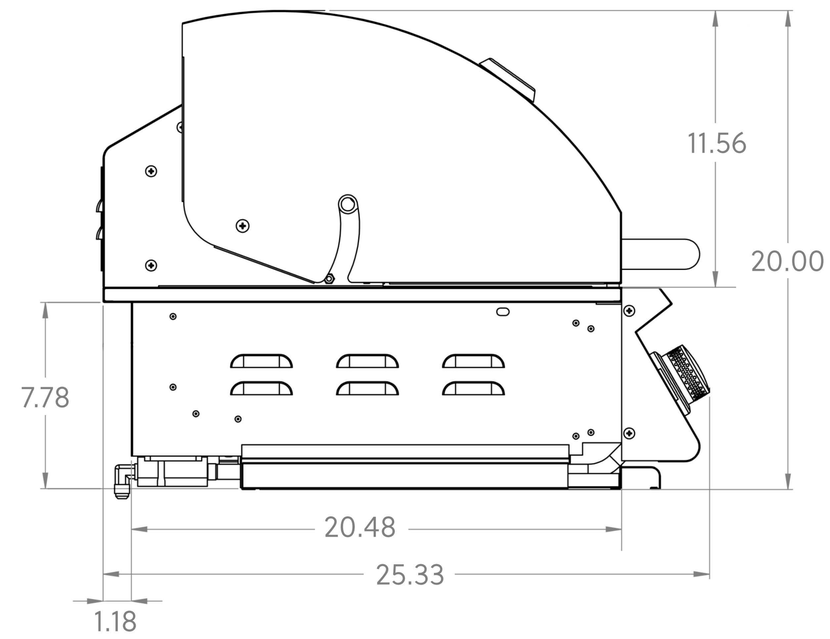

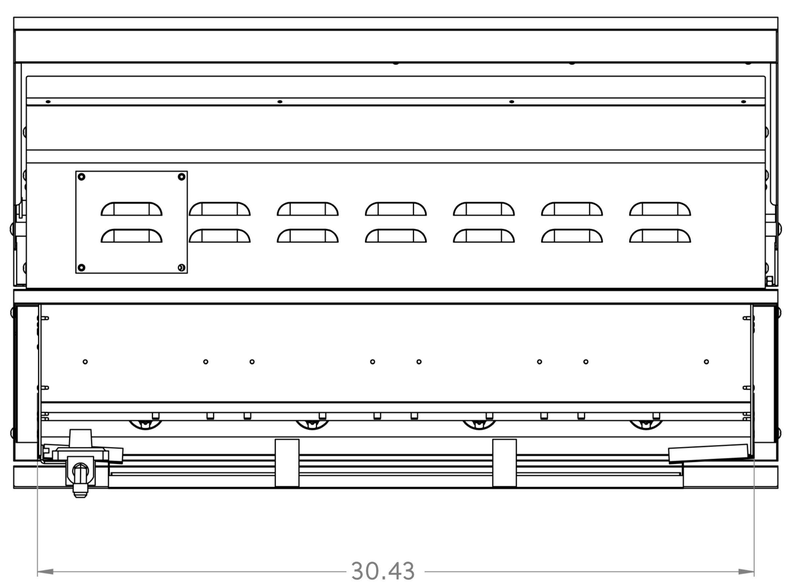

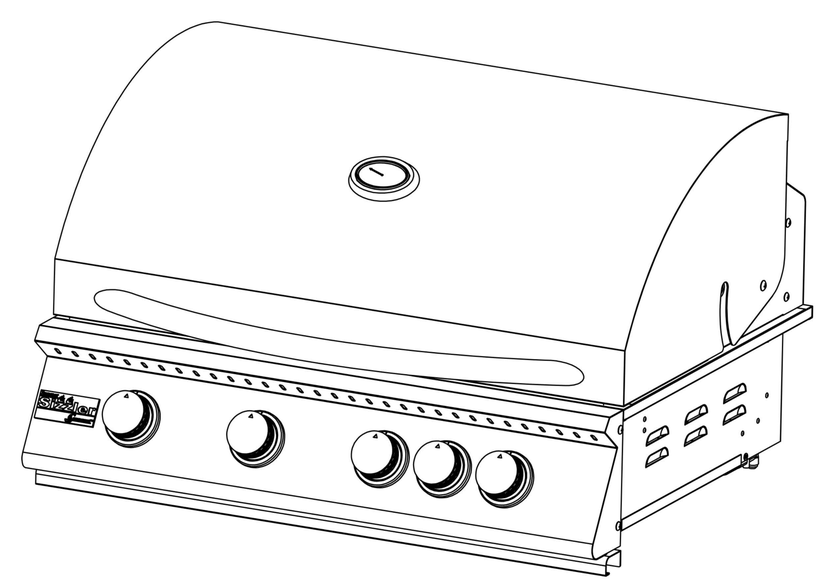

Suggested Cutout Dimensions*
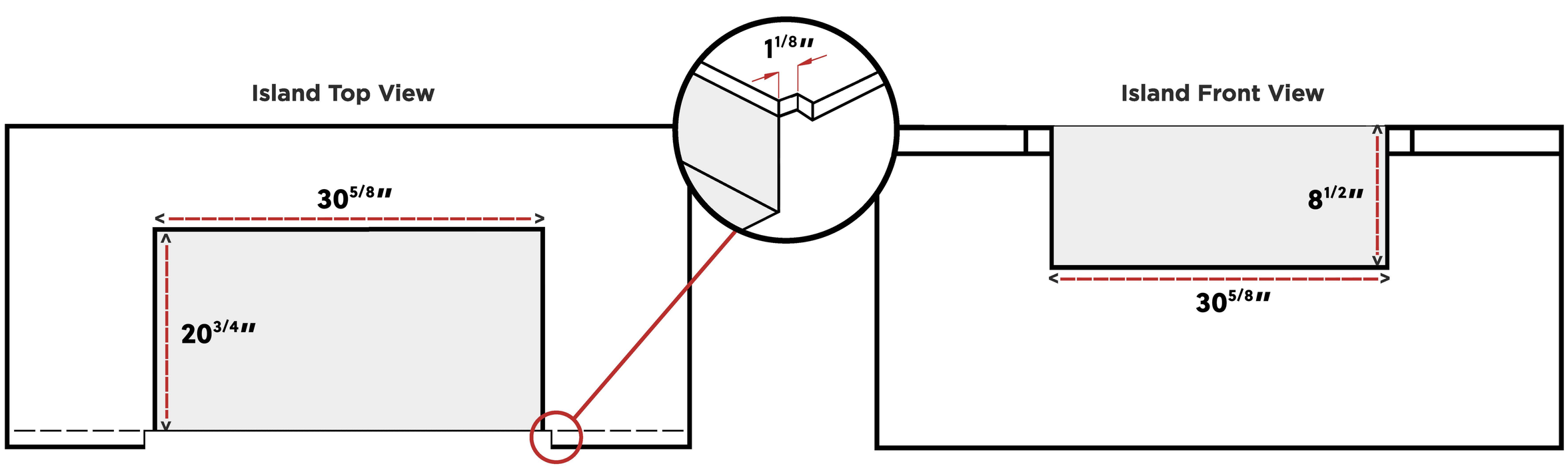
(W) 30 5/8" x (H) 8 1/2" x (D) 20 3/4"