SUMMERSET

32" Sizzler Pro Cart

Model	CART-SIZ32-DC
Overall Dimensions*	W56" X H36" X D22"
Shelf Dimensions	W11" X H22"
Cart Wheel Height	3 3/4"
#304 Stainless Steel Construction	
Comes Fully Assembled	
Door and Drawers Combo	
Easy Glide Rail System with Soft Closure Feature	

*** Manufacturer Approximate Overall Dimensions**
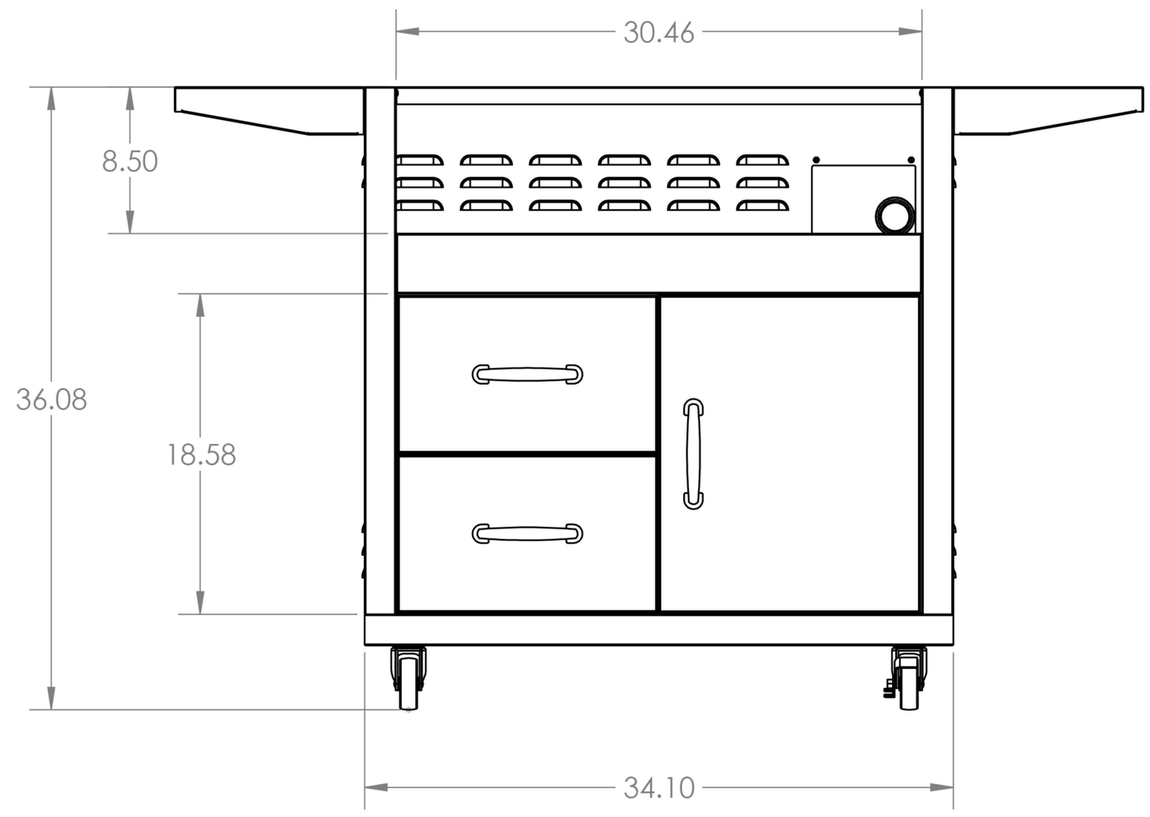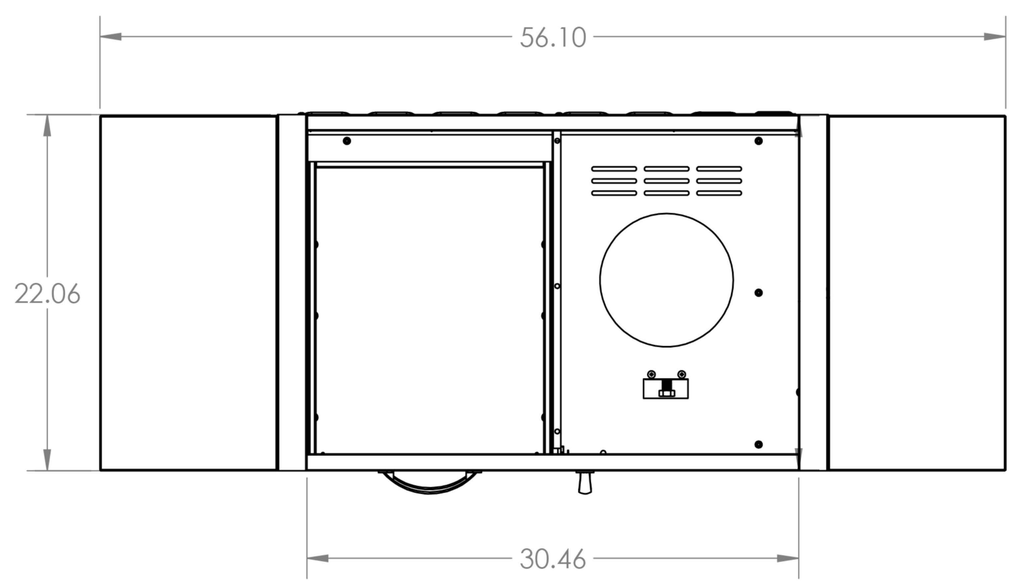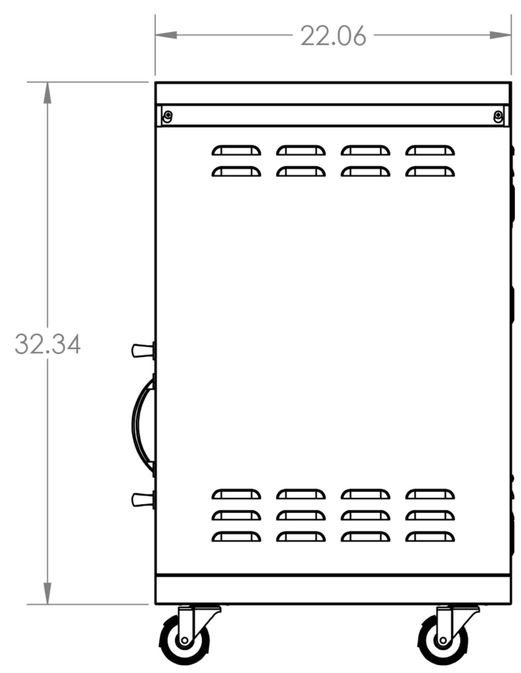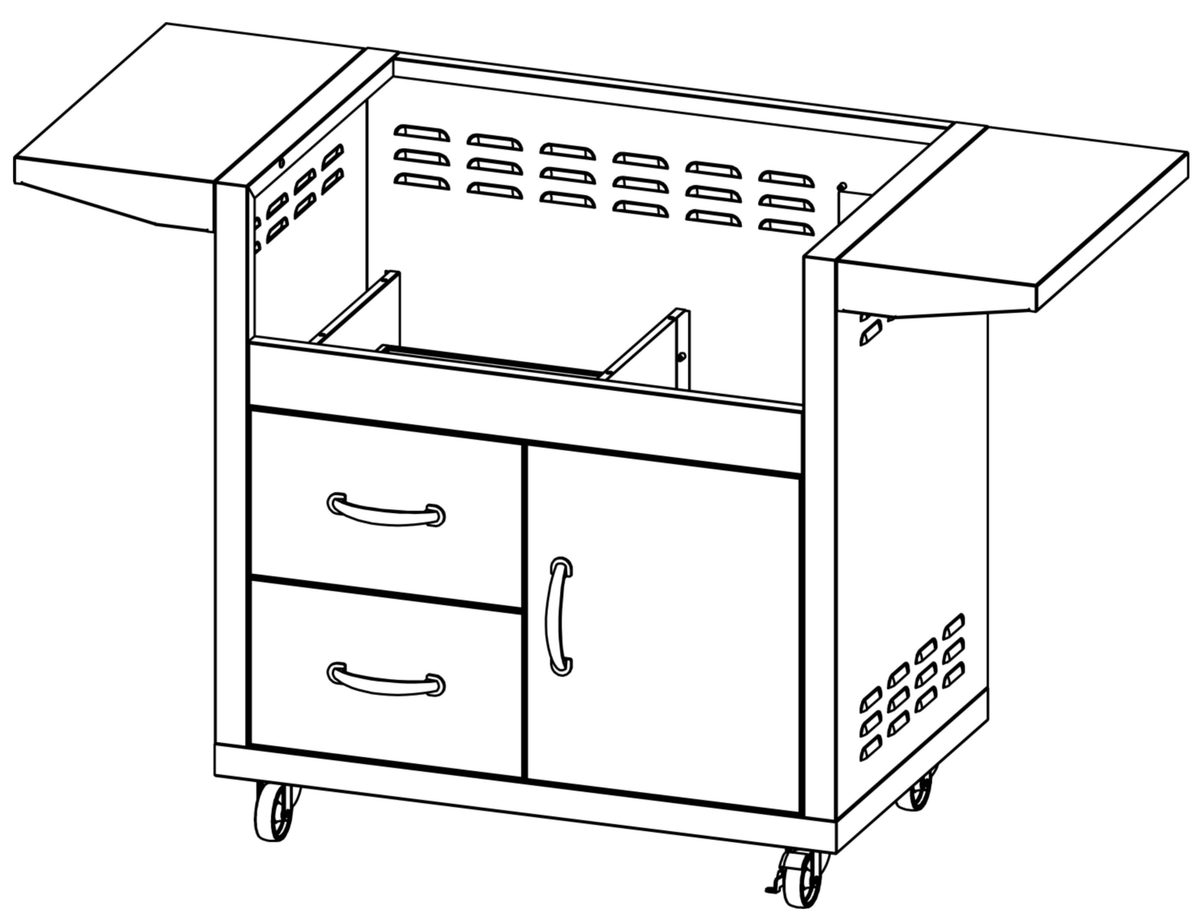
NOTES