ASSEMBLY INSTRUCTIONS

Quadro A Mobile Counter table

www.jasonl.com.au

Need help!
Call us on
1300 527 665

jason.l
your office furniture mate

Sizes:
1200x700, 1400x700, 1600x700, 1800x700

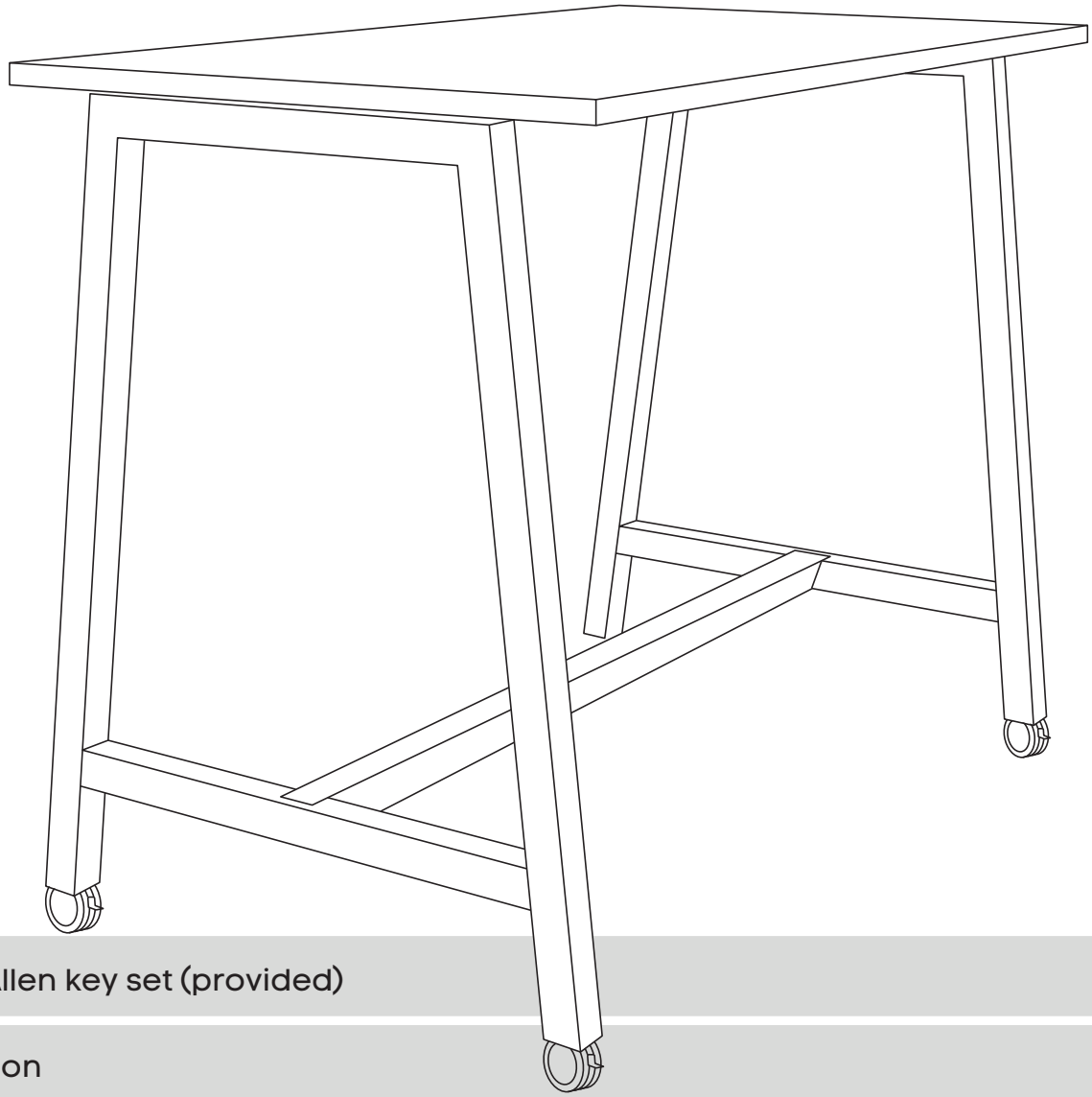

Tools Required: Power screwdriver; Allen key set (provided)

2 persons required for installation

ASSEMBLY INSTRUCTIONS

Quadro A Mobile Counter table

www.jasonl.com.au

Need help!
Call us on
1300 527 665

jason.l
your office furniture mate

Sizes:
1200x700, 1400x700, 1600x700, 1800x700

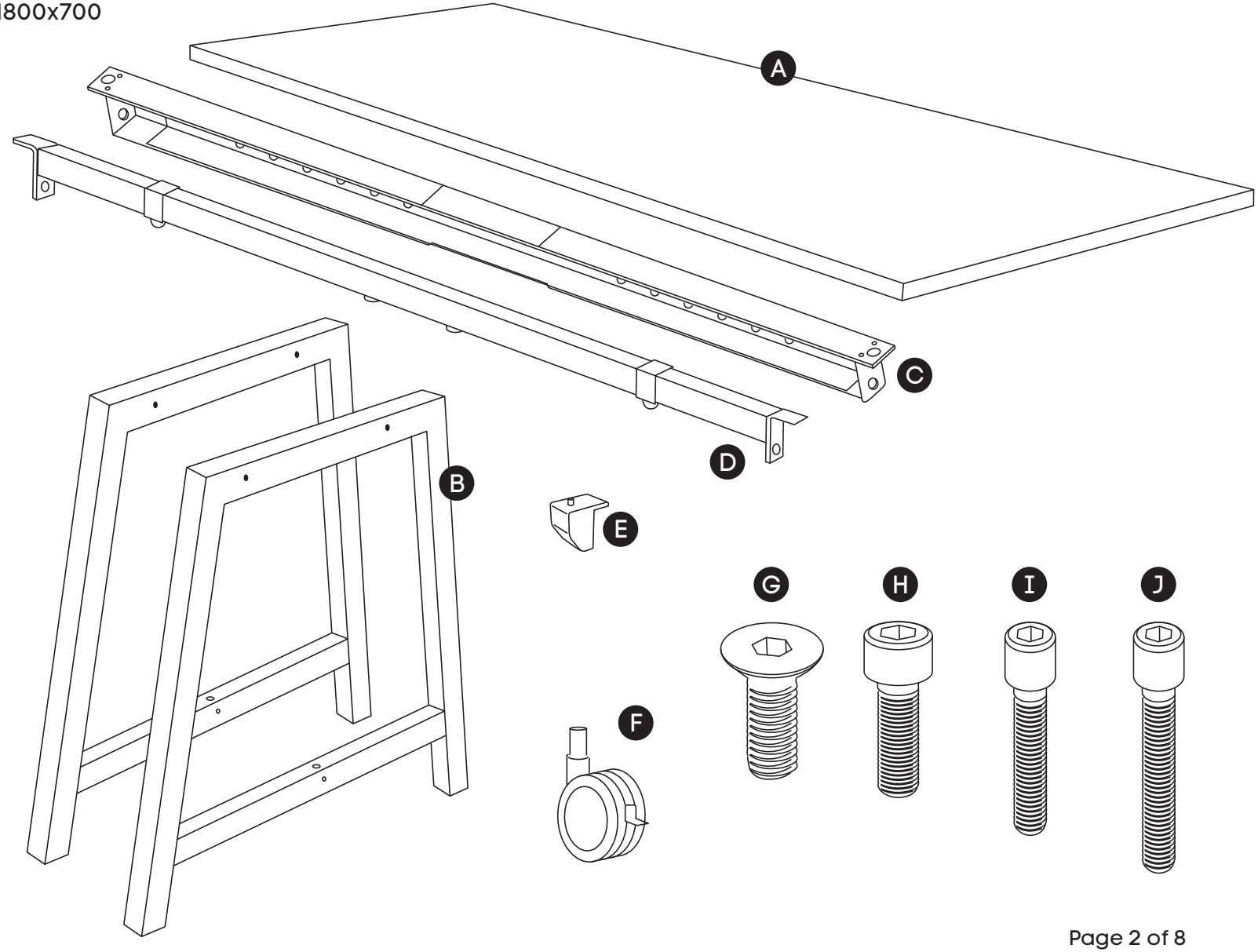

COMPONENTS

A Table top x1
B Leg Quadro A x2
C Upper Beam x1
D Lower Beam x1
E Plastic bracket x4
F Wheels x4

SCREWS

G M8x20MM CSK x4
H M8x20MM Socket head x4
I M6x20MM Socket head x4
J M6x30MM Socket head x4

K Allen key x2

ASSEMBLY INSTRUCTIONS

Quadro A Mobile Counter table

www.jasonl.com.au

Need help!
Call us on
1300 527 665

jason.l
your office furniture mate

Sizes:
1200x700, 1400x700, 1600x700, 1800x700

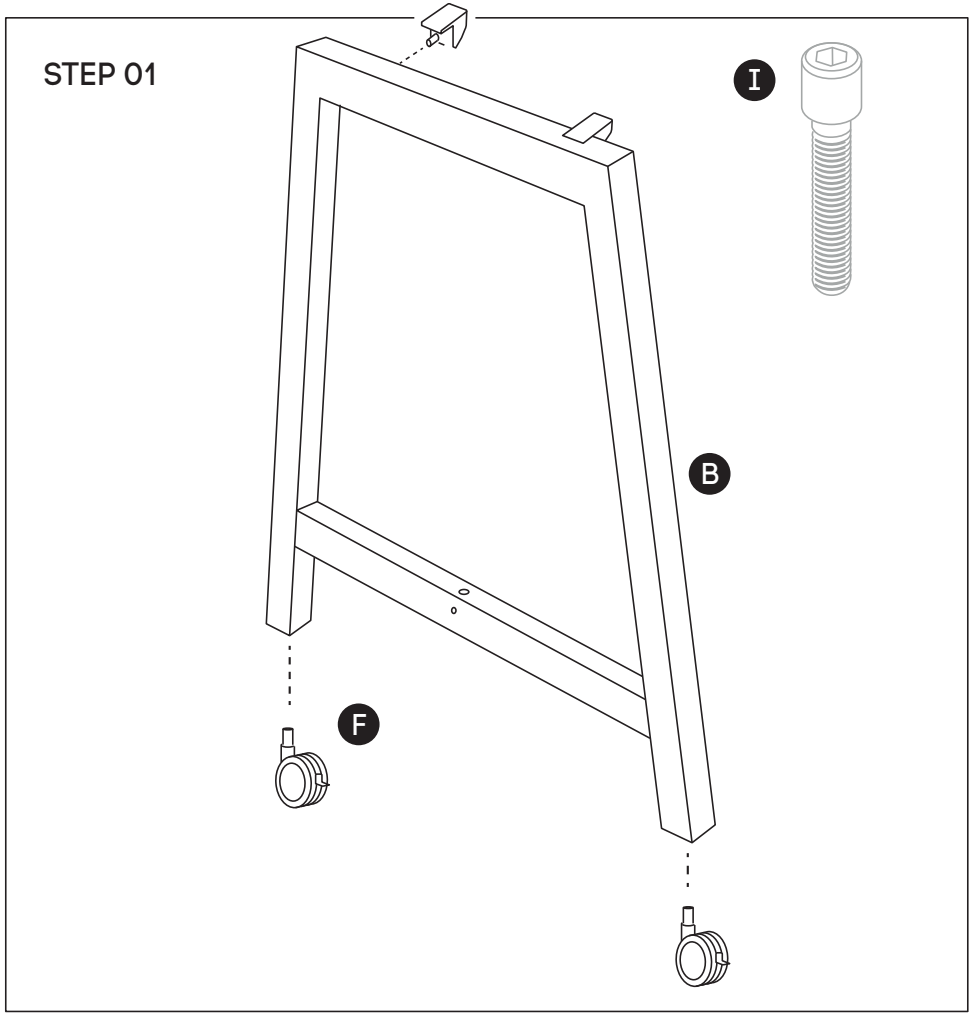

Using Allen Key provided, attach 2 plastic brackets per leg **(D)** (as per picture above) using M6x20MM **(I)** Socket head screw. Screw the wheels **(F)** to the bottom of each leg **(B)**

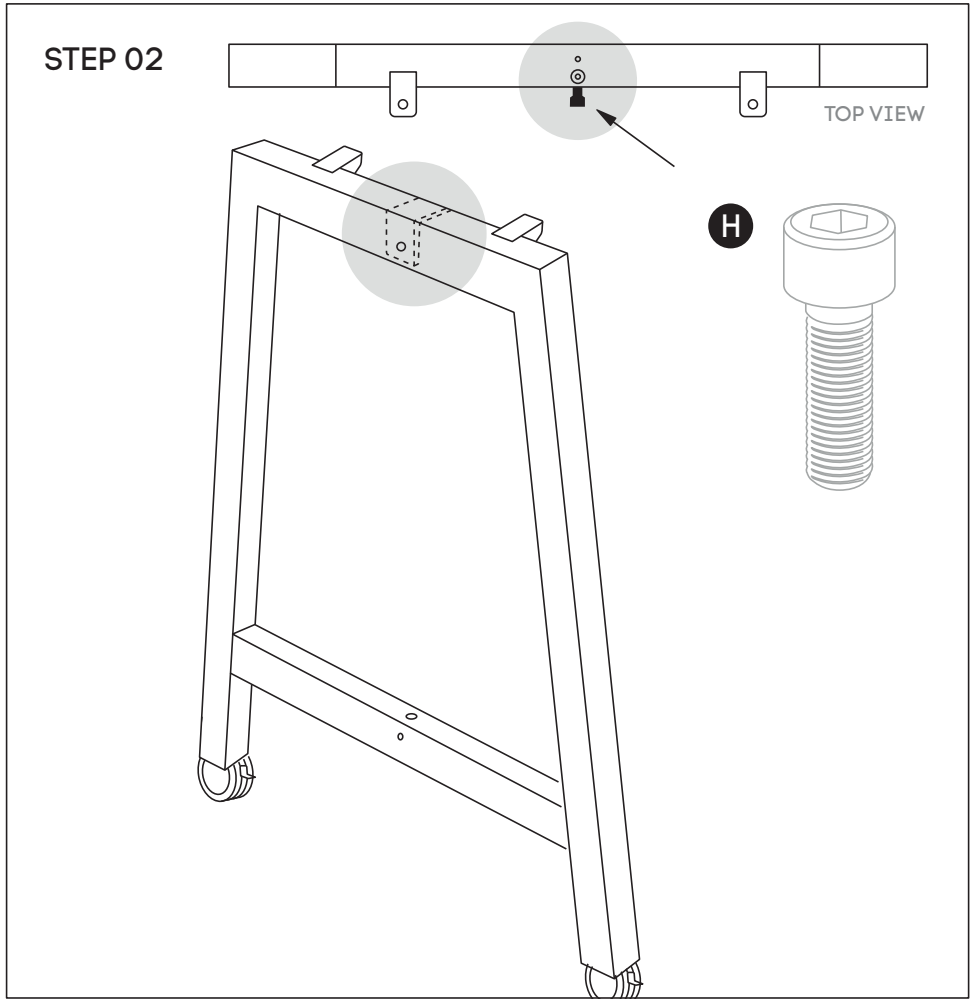

Using Allen Key provided, attach M8x20MM Socket head **(H)**- screw socket half way into leg for both legs **(B)**

ASSEMBLY INSTRUCTIONS

Quadro A Mobile Counter table

www.jasonl.com.au

Need help!
Call us on
1300 527 665

jason.l
your office furniture mate

Sizes:
1200x700, 1400x700, 1600x700, 1800x700

STEP 03

Adjust extendable beam **(C)** to desired length using markers and secure beam at that length using screws provided

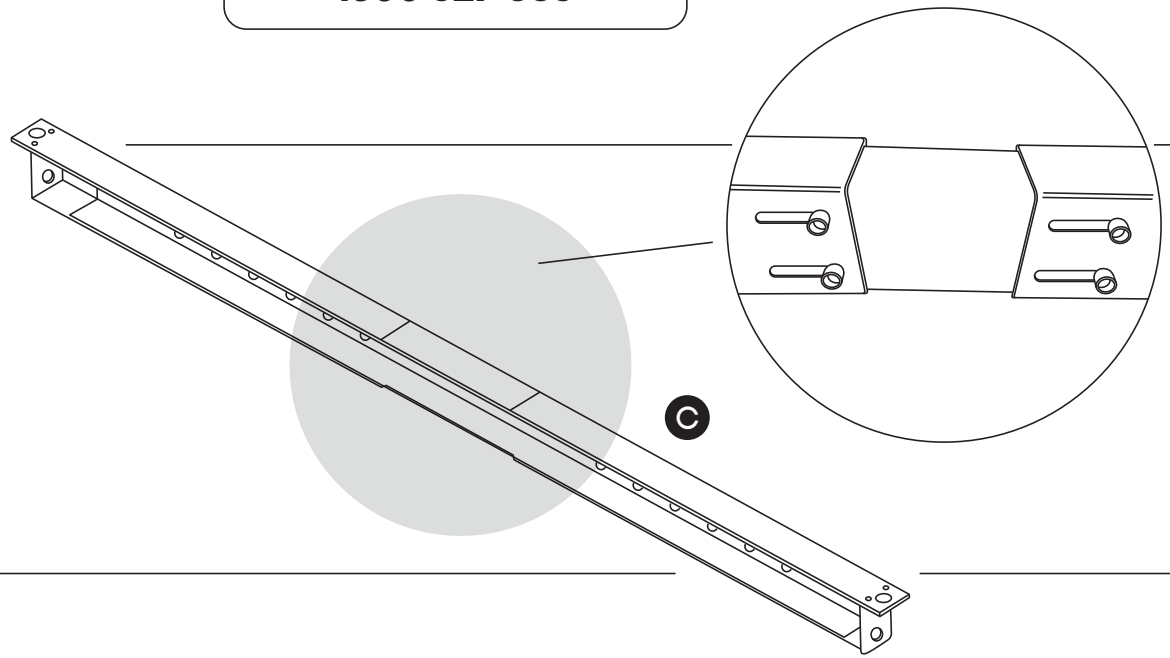

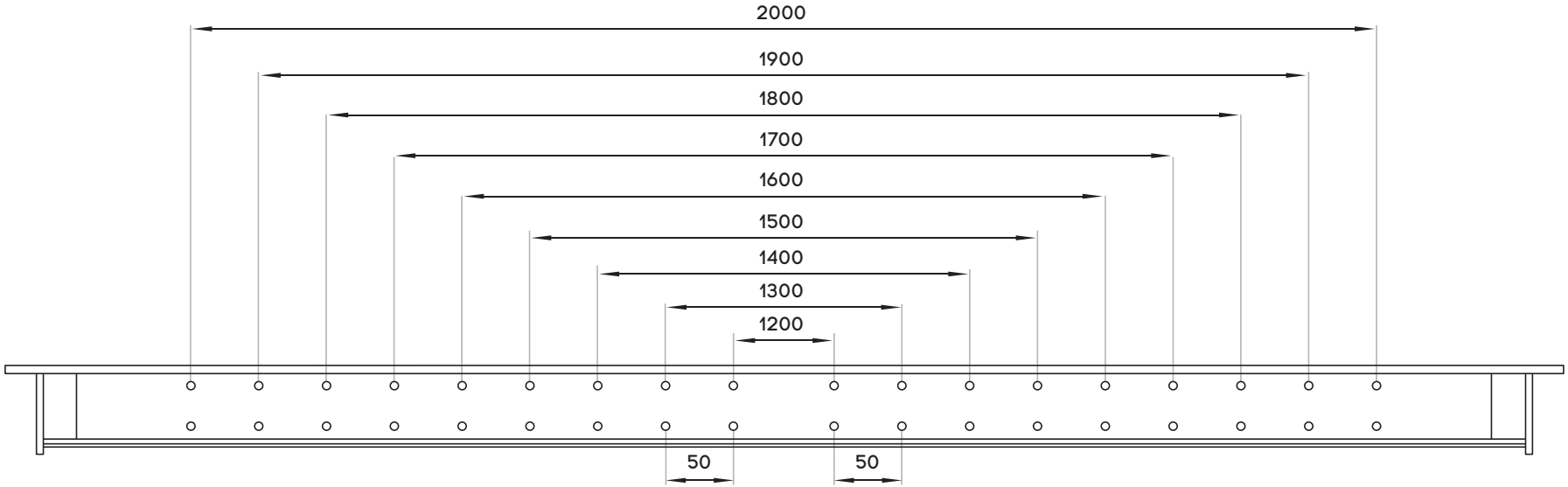

ASSEMBLY INSTRUCTIONS

Quadro A Mobile Counter table

www.jasonl.com.au

Need help!
Call us on
1300 527 665

jason.l
your office furniture mate

Sizes:
1200x700, 1400x700, 1600x700, 1800x700

STEP 04

Adjust extendable beams **(D)** to desired length.

1. Remove plastic inserts
2. Loosen 2 bolts on beam using allen key
3. Extent lower beam to the same distance as upper beam
4. Insert plastic inserts back into the beam

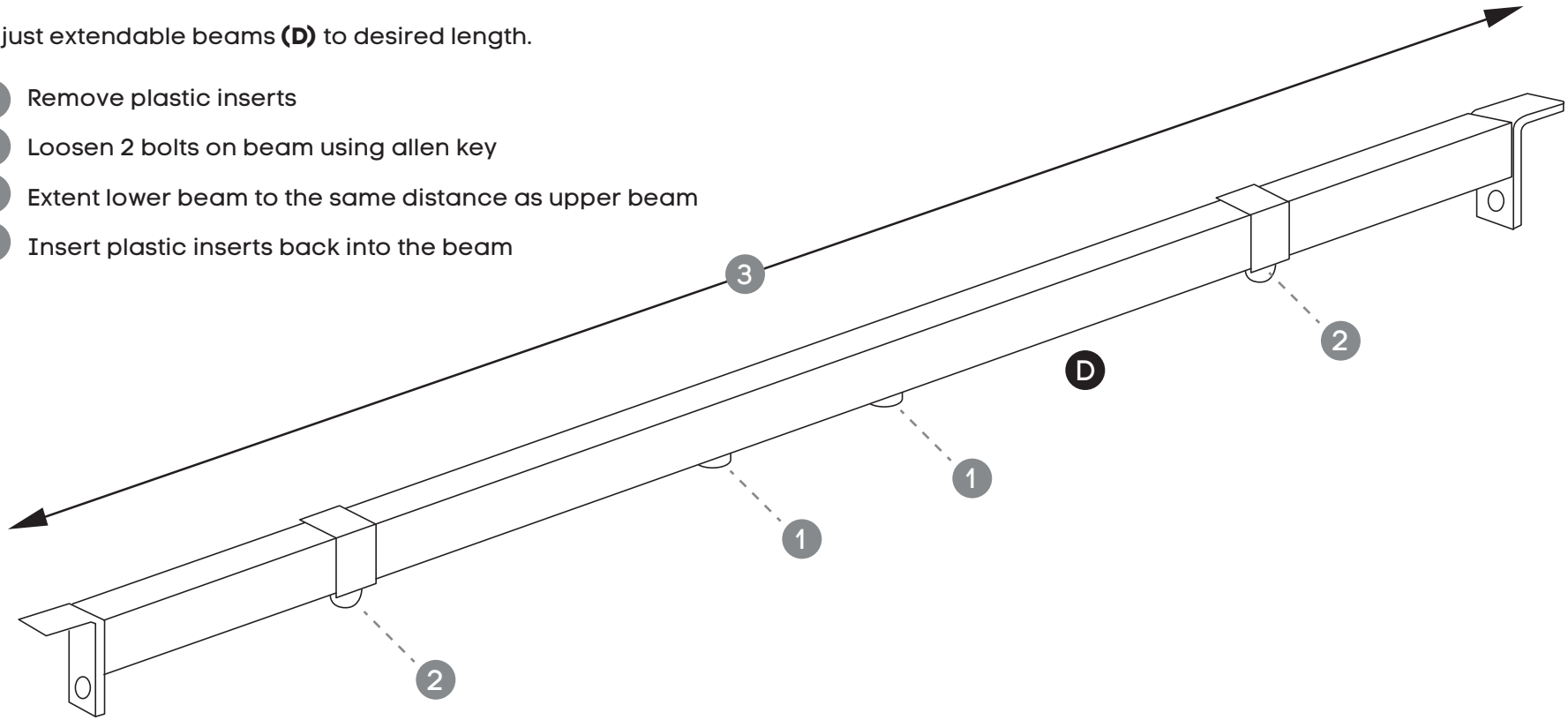

ASSEMBLY INSTRUCTIONS

Quadro A Mobile Counter table

www.jasonl.com.au

Need help!
Call us on
1300 527 665

jason.l
your office furniture mate

Sizes:
1200x700, 1400x700, 1600x700, 1800x700

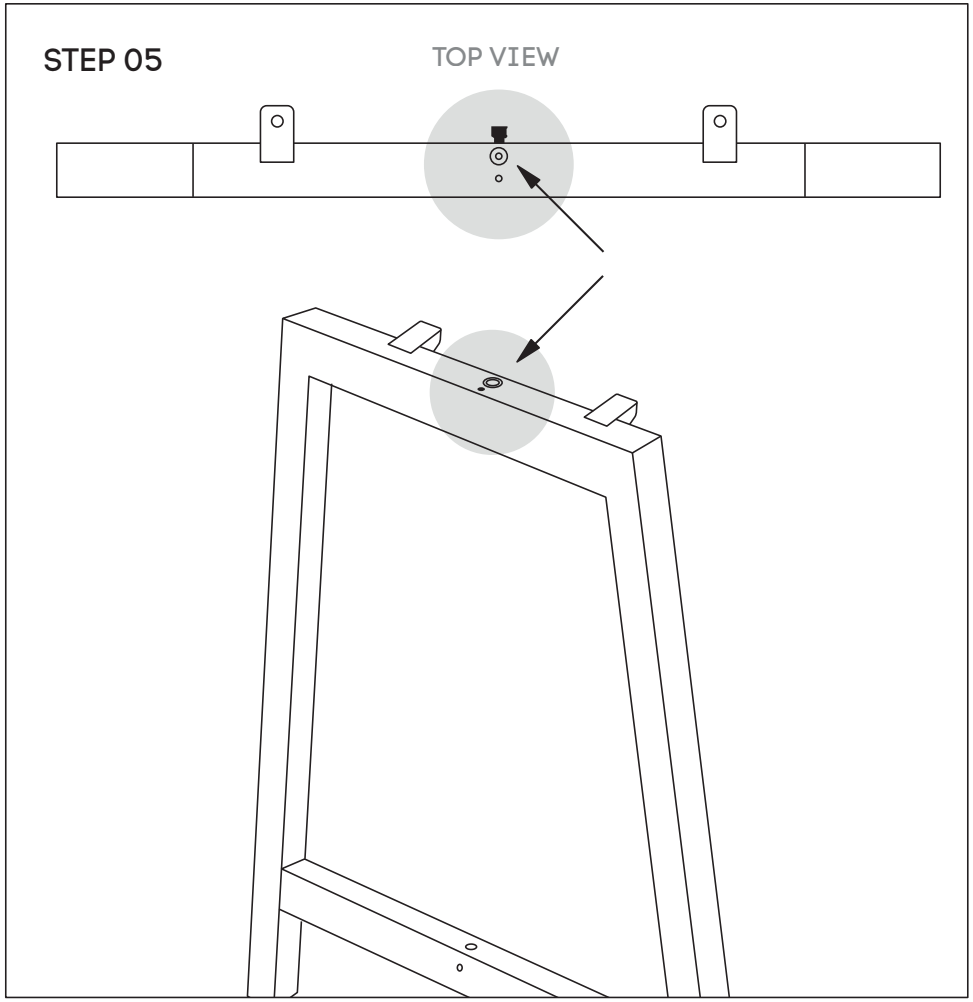

Attach Upper Beam **(C)** to legs **(B)** using nut insert in legs.
See point attached

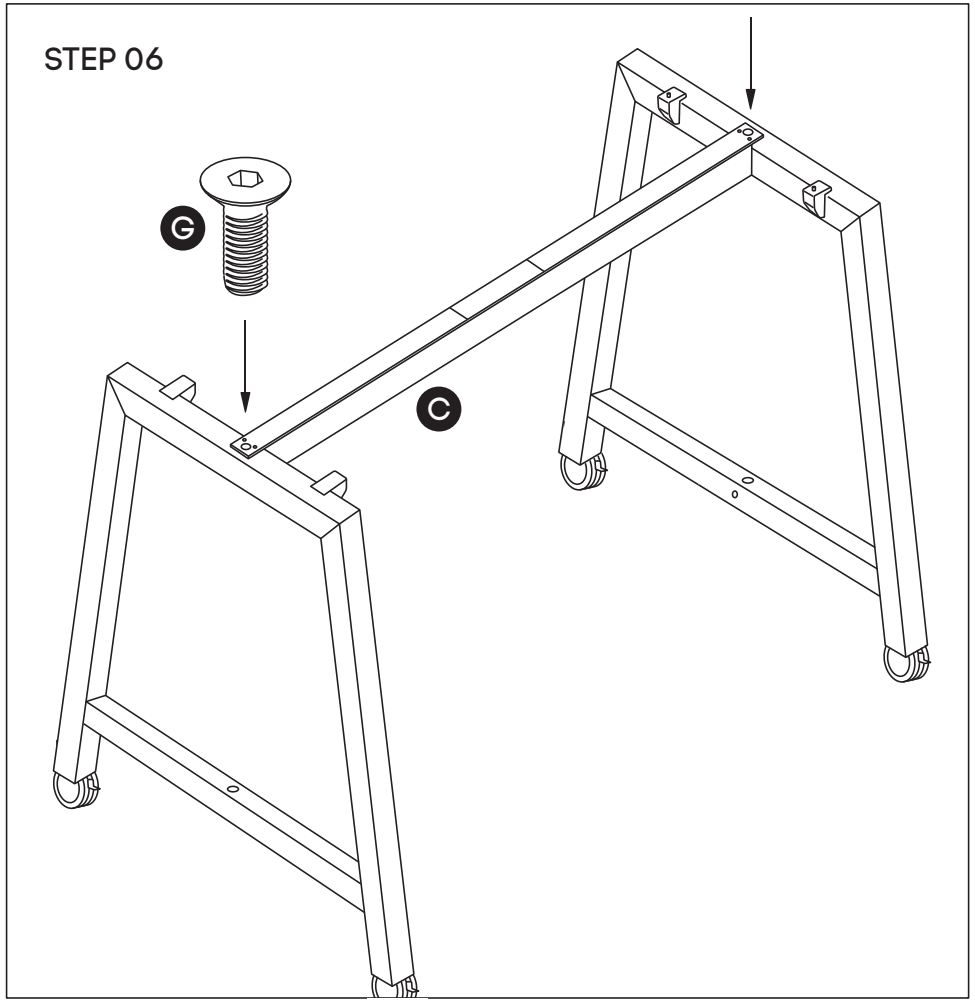

Frame looks like this. Using Allen Key, attach Upper Beam **(C)** with Sockets **(G).**

ASSEMBLY INSTRUCTIONS

Quadro A Mobile Counter table

www.jasonl.com.au

Need help!
Call us on
1300 527 665

jason.l
your office furniture mate

Sizes:
1200x700, 1400x700, 1600x700, 1800x700

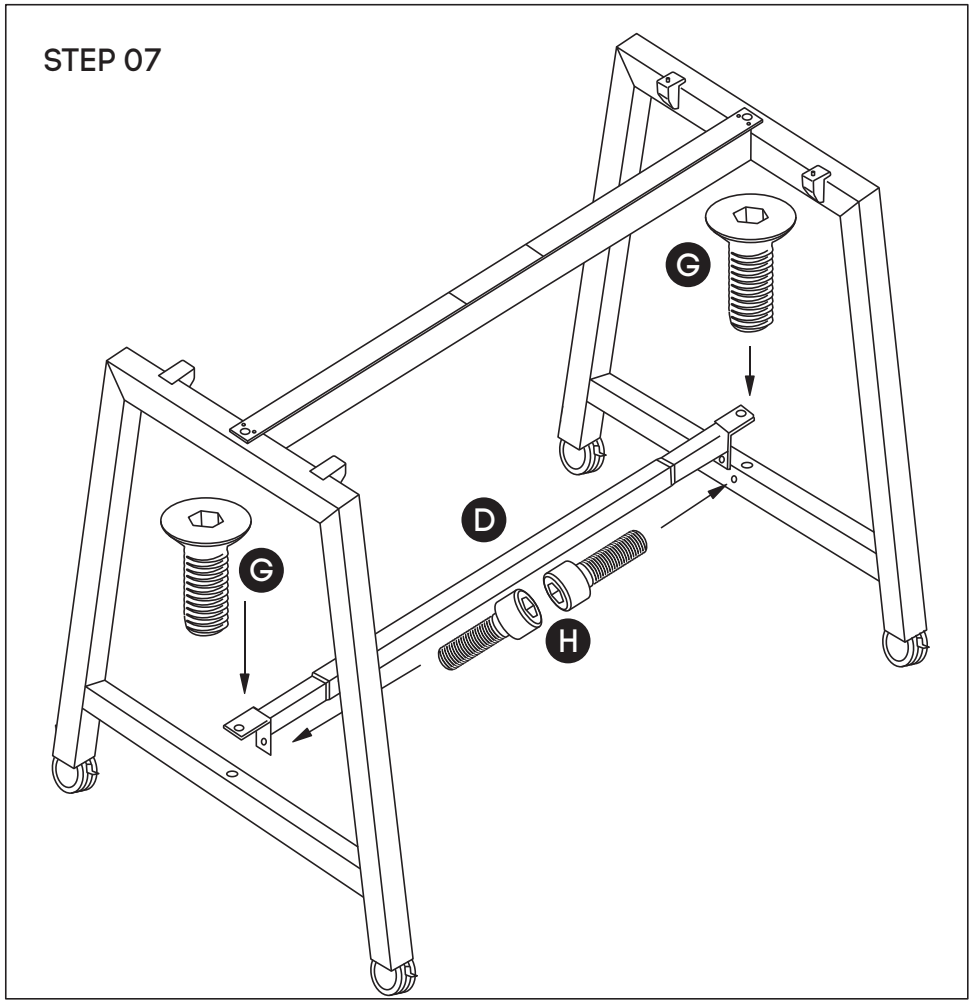

Frame looks like this. Using Allen Key. Tighen Sockets **(G)** on the Lower Beam **(D)** using Allen Key **(J)**. Insert plastic spacers to improve regidity. Attach two Sockets **(H)** to the side of the lower side beams (as shown in the picture).

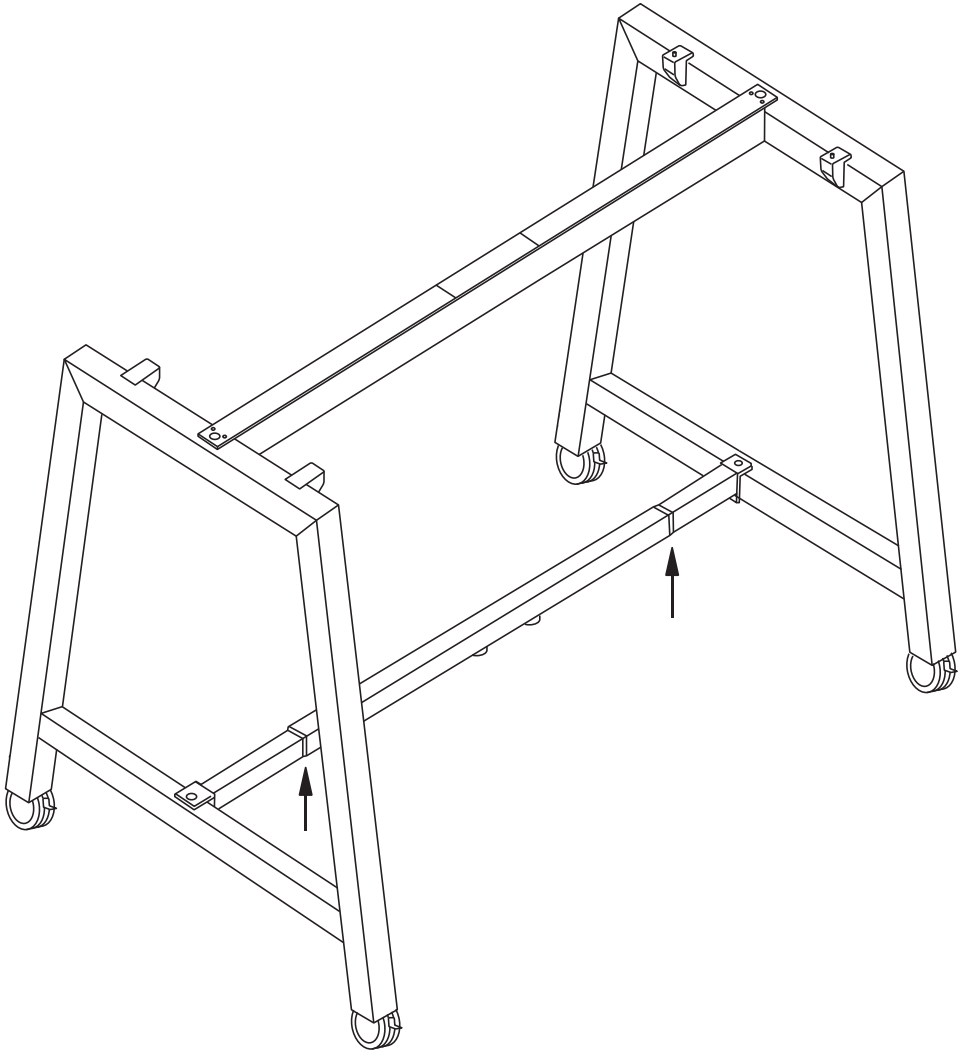

Using the allen key, tighten two bolts on the under side of the lower beam. This will make the frame sturdy.

ASSEMBLY INSTRUCTIONS

Quadro A Mobile Counter table

www.jasonl.com.au

Need help!
Call us on
1300 527 665

jason.l
your office furniture mate

Sizes:
1200x700, 1400x700, 1600x700, 1800x700

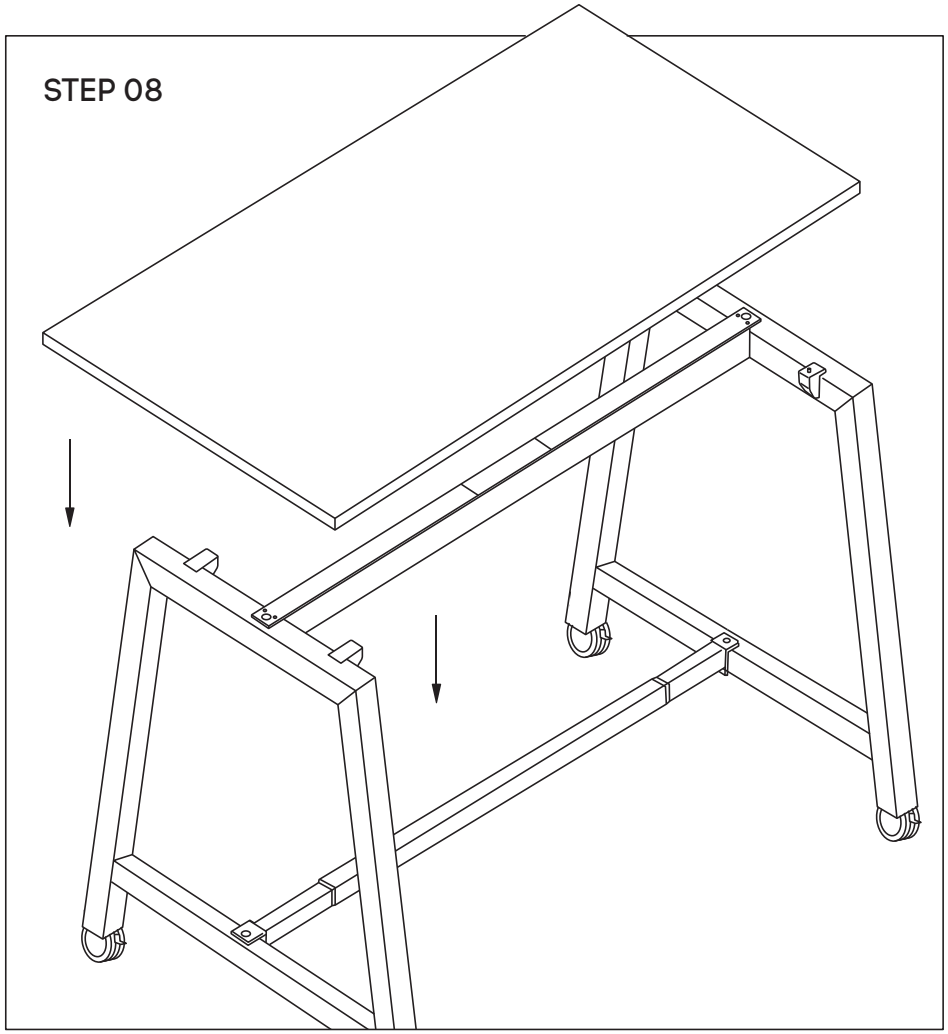

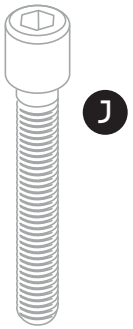

TABLE TOP
BOTTOM VIEW

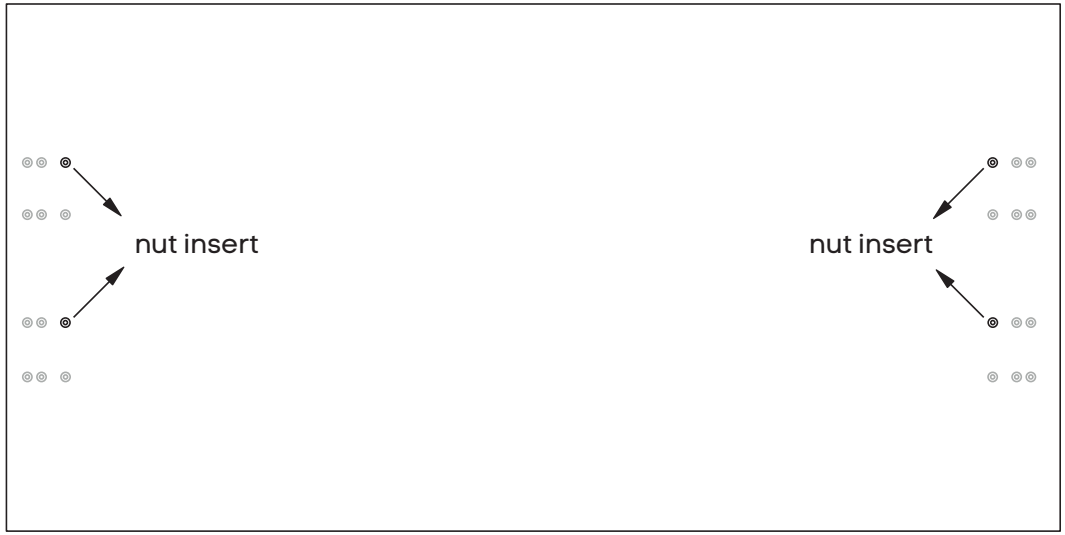

Place desktop ontop of frame. Nut inserts in top will align with plastic joiner brackets using M6x30MM **(J)** sockets attached top to frame.