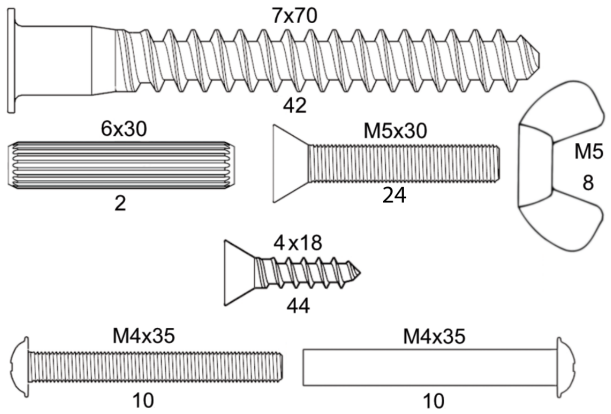

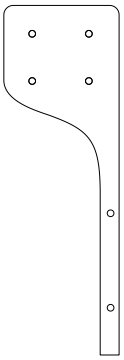

Producer 88

1

M4x35
M5x30

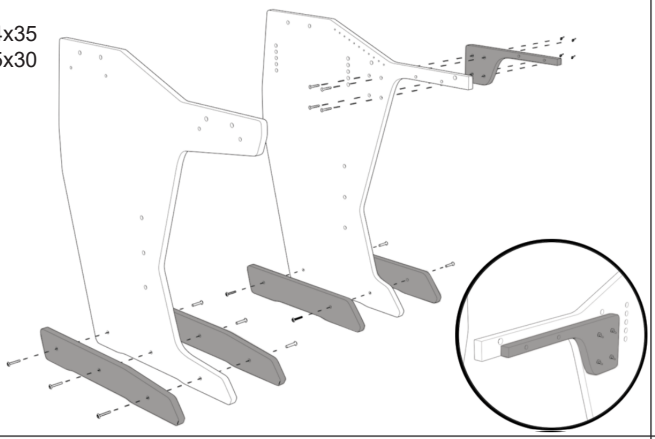

2

7x70

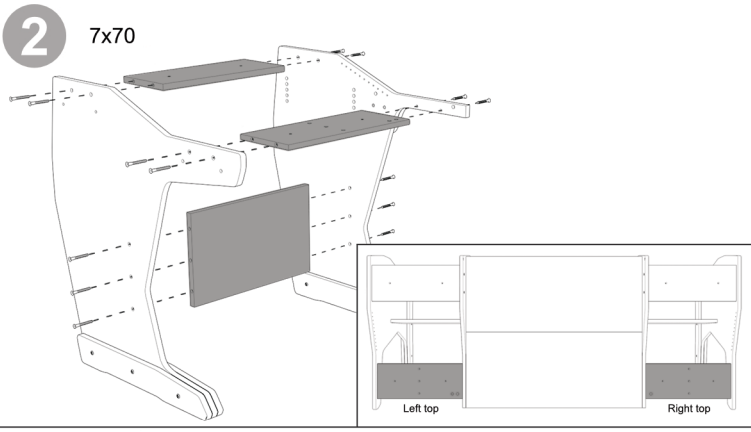

3a

7x70

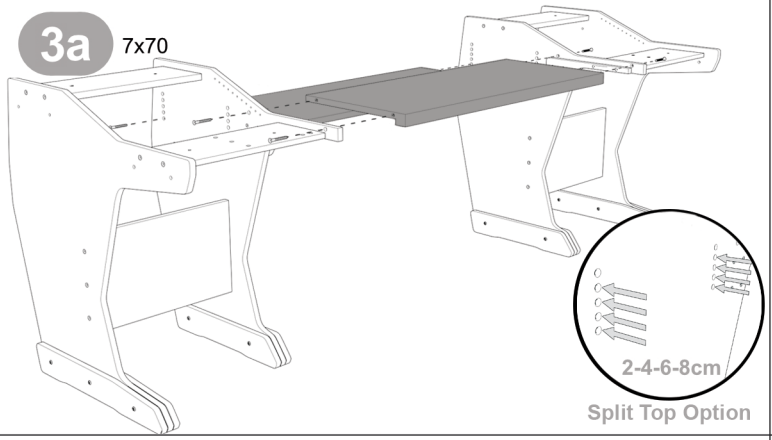

Split Top Option

4a

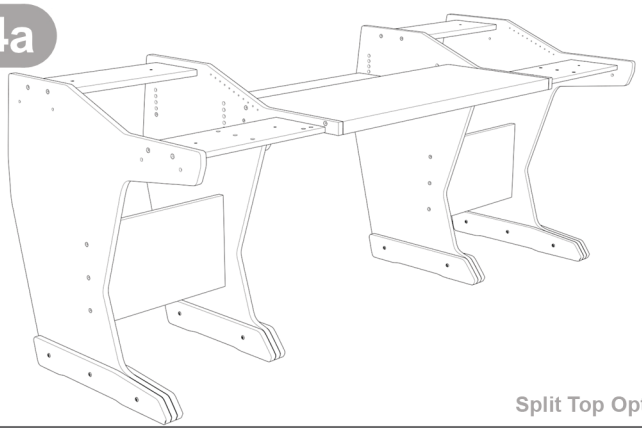

Split Top Option

3b

6x30

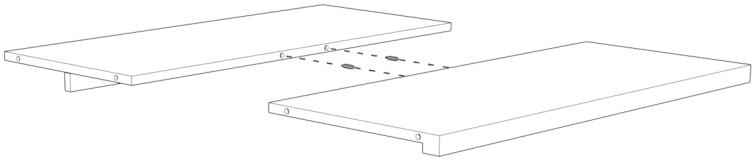

Joint Top Option

4b

7x70

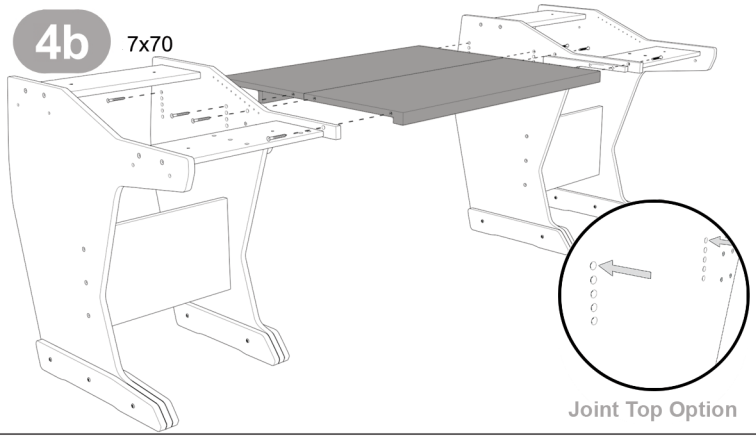

Joint Top Option

5a

Drawer height
8-9-10-11cm

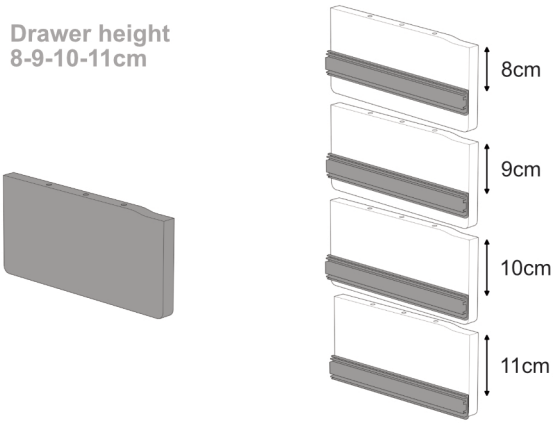

5b

Drawer height
12-13-14-15cm

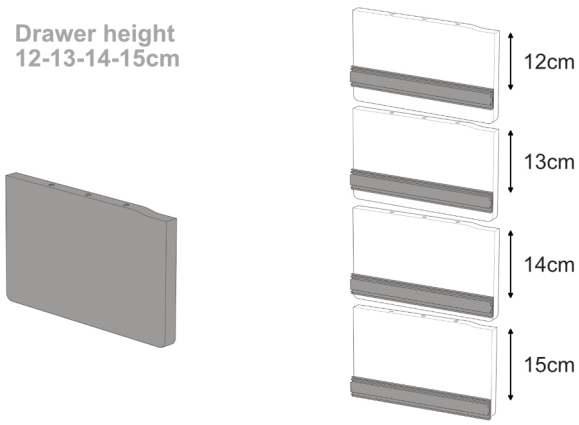

6

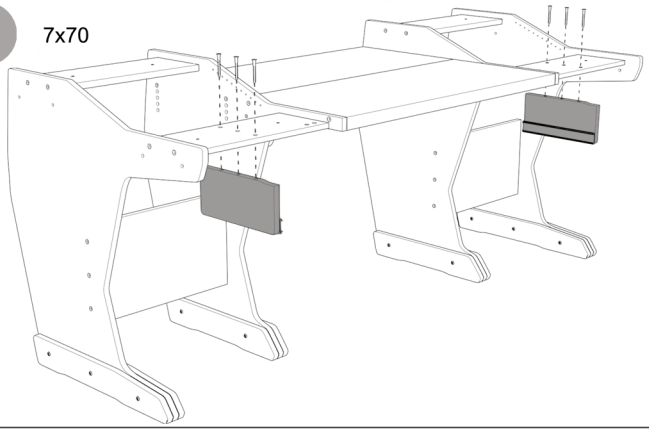

7

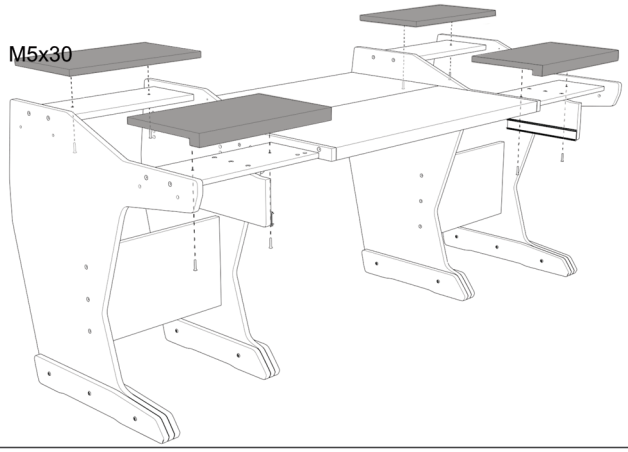

8

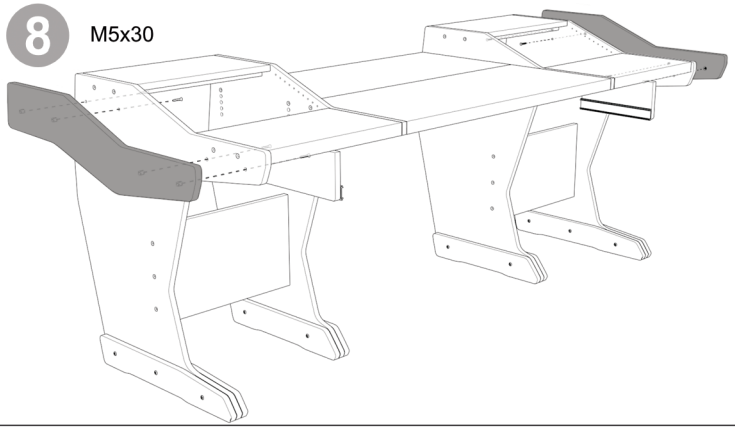

9

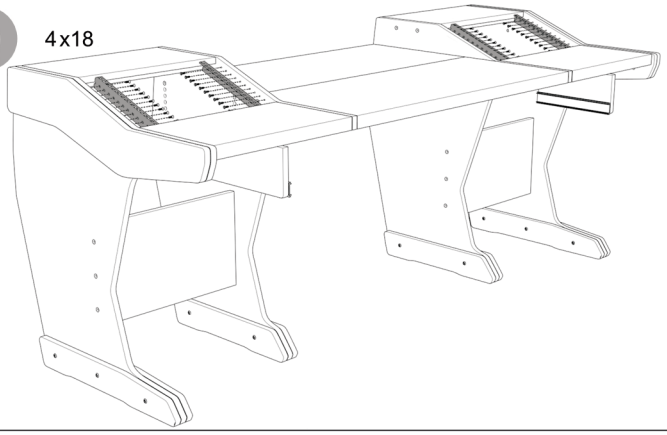

10

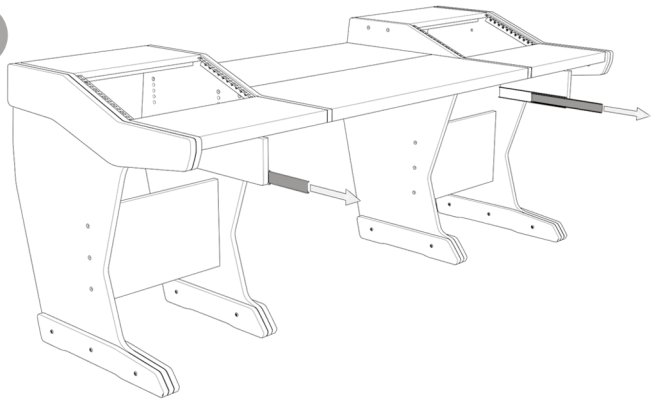

11

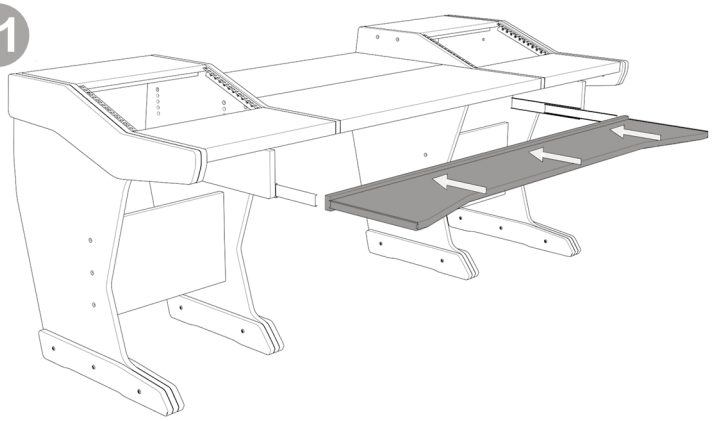

12