idh

by St. Simons, Inc.

Quality Solid Brass Decorative Hardware & Bath Accessories

"The Special Finishes Specialist" ©

idhbrass.com

Product Data Sheet

Premium Grade Solid Brass

Small Casement Fastener
Item# 21013

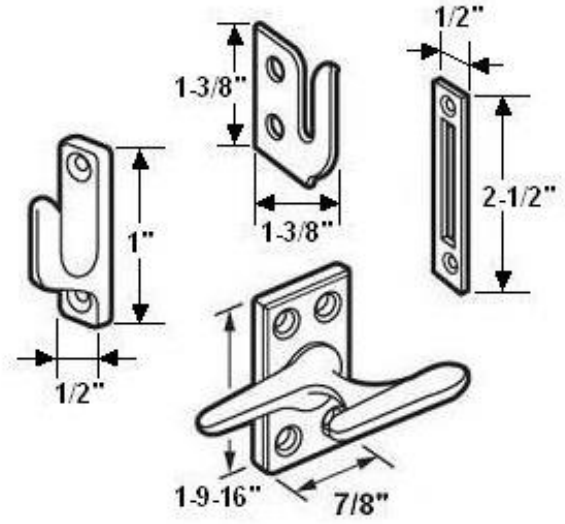

Dimensions:

- Body: 7/8" x 1-9/16"
- Handle Length: 1-5/8"
- Projection: 1-1/3"
- Body Weight: 2-1/2 oz.
- Total Weight: 4-3/4 oz. (including 3 Strikes)

Dimensions are for reference use only.
For exact dimensions, please measure actual part.

Product Description & Features:
21013 Solid Brass Small Casement Fastener

- **Rim Strike**
  → 1-3/8" x 1-3/8"
- **Surface Strike**
  → 1/2" x 1"
- **Mortise Strike**
  → 1/2" x 2-1/2"

Catalog Section: E	**Small Casement Fastener**	
	Item# 21013	Date: Rev 03/13