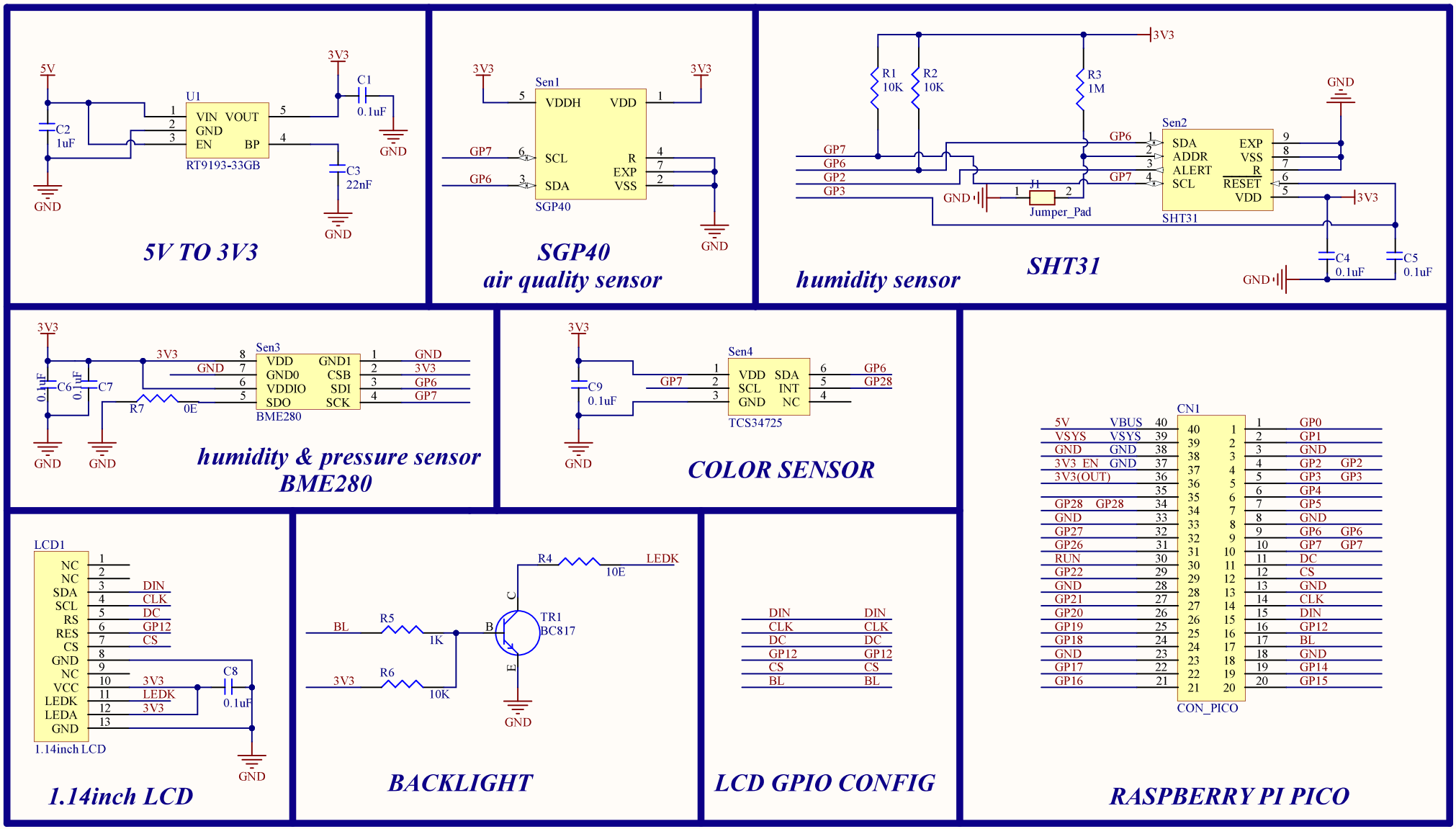

PICO SENSE HAT			
Size: A4	Revision: V1.0	Sheet: 1/1	SB Component Ltd. Kemp House, 152-160, London EC1V 2NX.
Date: 04-04-2022	Time: 17:10:58	DrawnBy: Deepak Singh	