Barracuda^{E} 22 kpsi Shotgun Swivel (BC-K, BC-K-P2)

Description:

The BarracudaÈ is a self-rotating swivel designed for handheld shotgun waterblast cleaning. It has a 9/16 medium pressure cone and thread inlet port; an adapter is required for 1/2 or 3/8 npt pipe lances. Two standard heads are available; the two jet head has 1/4 npt nozzle ports, and the four jet head has 1/8 npt nozzle ports. It is best to use two larger jets for thick deposits such as concrete removal, and four jets for thin coatings or scale, as it allows the tool to be moved faster over the surface. Both heads can be used over the entire range of pressure and flow shown on the jetting chart. Only the orifice sizes need to be changed to suit. The BarracudaÈ uses automatic transmission fluid (ATF) as a lubricant for the bearings and speed control components. It can be flushed/refilled with ATF through the fill port using a syringe. This is recommended after every 20 to 40 hours of operation.

Press. Kpsi	Nozzle ID, in.													
	.018	.020	.022	.024	.026	.029	.032	.035	.038	.042	.047	.052	.057	.063
2-Jet Model # BC-K														
5										6.5	8.1	9.7	11.3	13.3
10							5.5	6.5	7.6	9.2	11.4			
15					4.4	5.5	6.7	8.0	9.4					
20				4.4	5.1	6.4	7.7							
22				4.6	5.4	6.7	8.1							
4-Jet Model # BC-K-P2														
5					5.1	6.3	7.5	8.9	10.3	12.1				
10			5.2	6.1	7.2	8.8	10.6							
15	4.3	5.2	6.3	7.5	8.8									
20	4.9	6.1	7.3											
22	5.2	6.4	7.7											

Operation:

The BarracudaÈ should always be used with a gun that includes a dump or pressure shut-off mechanism, so that pressure can be rapidly released. The gun barrel length including the BarracudaÈ should be long enough that the gun operator cannot pass the jets over his feet or legs. It is recommended that the thrust produced by the jets be no more than 1/3 the weight of the operator. Install the desired nozzle size into the head; we recommend using Parker Thread Mate and teflon tape on the nozzle threads. Attach the BarracudaÈ to the shotgun barrel. Flush the high pressure hose before connecting to the gun inlet. Check that the dump mechanism functions correctly before going to operating pressure. The BarracudaÈ high pressure seal may initially leak at lower pressure, but the seal should pop shut as pressure is increased. To set the operating pressure, the gun operator should close the dump on the gun, and the pump operator should slowly increase the pressure to allow the gun operator to compensate for the jet thrust. The BarracudaÈ head should be within 2 to 8 inches of the surface, depending on how difficult it is to remove the material.

Troubleshooting:

High Pressure Seal Leak: if water is coming out of the slots in the body, see if it is coming out the bottom of the slot (near the head) or the top of the slot (near the inlet end). If it is coming out near the inlet end, it is the inlet connection that is leaking. If it is coming out the bottom of the slot, it is the high pressure seal that is leaking. Follow the directions below to replace the carbide seat and high pressure seal; if it still leaks then the shaft end may be damaged and needs to be repaired or replaced.
Seals wear out quickly: When the life of the high pressure seal becomes noticeably less, the seal holder needs to be replaced. Also replace the carbide seat if it has not been replaced with each seal change. Very rarely, the spring that controls the speed of the tool will break, allowing the tool to spin too fast and quickly wear out the seal.
Will not rotate: Check the nozzles to see if they are plugged or partially plugged. To clean them, they must be removed from the head; it does not do any good to poke the material plugging the nozzle back into the head. Check that the nozzles are the correct size based on the chart above. If all of these things appear to be correct, the tool may need to be disassembled and repaired. If the tool has just been rebuilt, and the tool starts to spin but stops as pressure is increased, the bearing RJ 007 is installed backwards and the tool must be disassembled and fixed.

Maintenance: *Blow out all water with compressed air before storing tool!

To replace the high pressure seal:

1. Remove the O-Ring (BJ 072) from groove in Body. It is easiest to push it inward from the top of the slot.

2. Use two picks inserted thru the slots to pry the Seal Holder (BC 120-C) and Inlet Seat (BC 122) up and out of the Body.

3. Remove the H.P. Seal (FT 012) and Carbide Seat (FT 011-UH). Inspect the Seal Holder for grooves or cracks. If it is badly grooved on one end, it can be flipped over or replaced.

4. Inspect Carbide Seat (FT 011-UH) for chips or erosion. Replace if damaged. Inspect end of shaft for dings.

5. Check that O-Ring (BC 123) is in groove of Inlet Seat (BC 122). Place Seal Holder (BC 120-C) on top of Inlet Seat (against the side with the O-Ring).

6. Apply grease to a new H.P. Seal and install in Seal Holder. The end with the O-Ring and metal cone faces away from the Carbide Seat. Apply grease to the face of the Carbide Seat and install against H.P. Seal.

7. Balance the Inlet Seat and Seal Holder on fingertip; turn swivel upside down (nozzles up) and slide the Inlet Seat and Seal Holder into the Body. Make certain that the Carbide Seat stays in Seal Holder.

8. Turn the swivel inlet end up; the Inlet Seat and Seal Holder should be far enough into Body to install the O-Ring into the groove in Body.

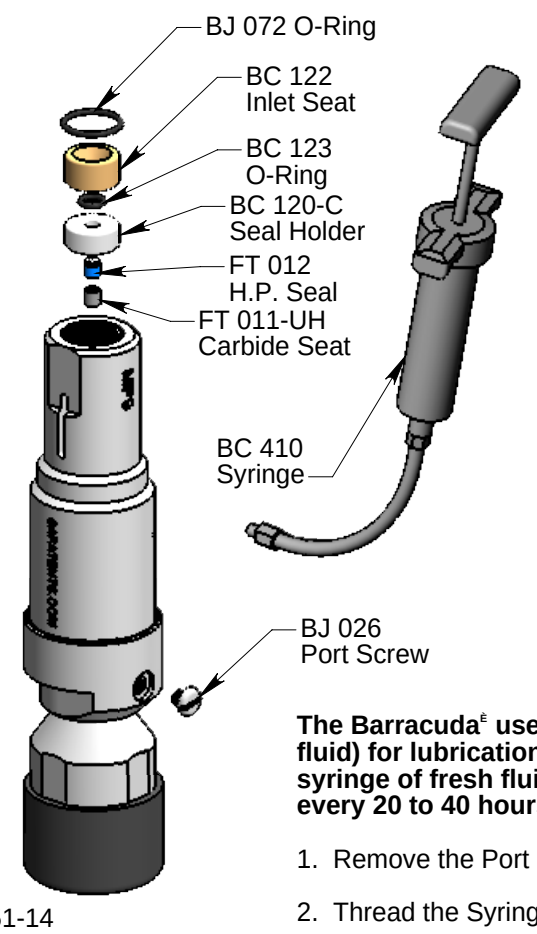

Detailed View:

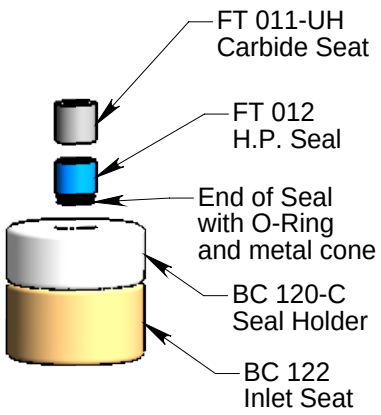

The Barracuda^{E} uses ATF (automatic transmission fluid) for lubrication. It is recommended that a full syringe of fresh fluid be added to the swivel after every 20 to 40 hours of operation.

1. Remove the Port Screw (BJ 026)

2. Thread the Syringe (BC 410) into the port.

3. Squeeze fresh ATF into the swivel; excess will come out the slots.

4. Remove Syringe and install Port Screw.

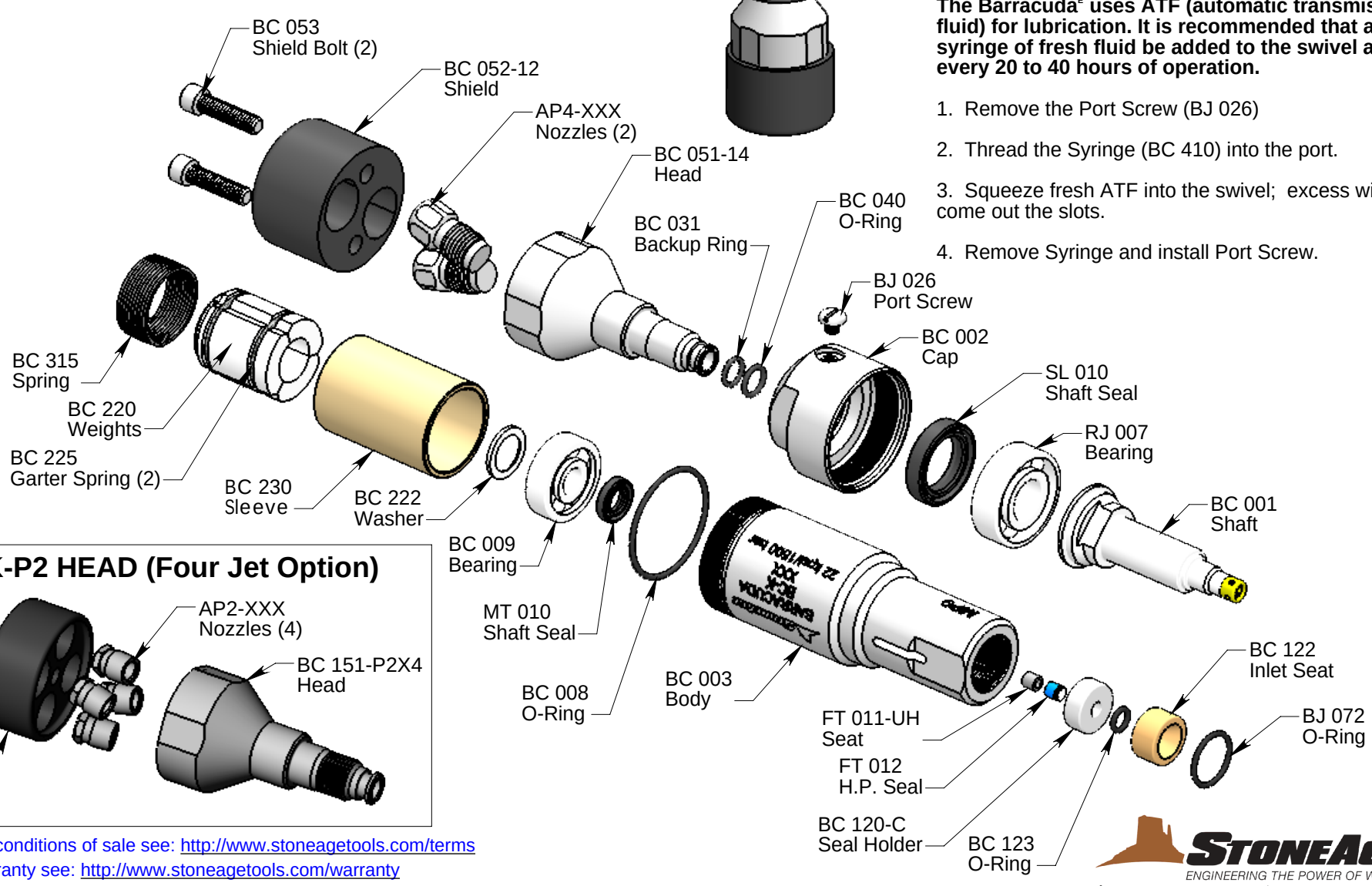

BC-K-P2 HEAD (Four Jet Option)

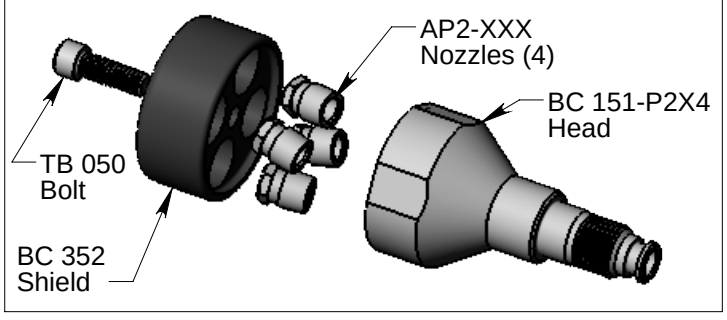

For terms and conditions of sale see: http://www.stoneagetools.com/terms
For limited warranty see: http://www.stoneagetools.com/warranty
For applicable patents see: http://www.sapatents.com

PL 514 É 07/24/2017 StoneAge^{E}, All Rights Reserved

Barracuda[E] 22k psi Shotgun Swivel (BC-K, BC-K-P2)

Disassembly:

1. Remove the O-Ring (BJ 072) from the Body. Pry out the Seal Holder (BC 120-C) and Inlet Seat (BC 122) as explained in the Maintenance Section.

2. Unscrew the Body (BC 003) from the Cap (BC 002), remove the Sleeve (BC 230); it may be still in Body.

3. If you think the Shaft Seal (MT 010) is bad, remove it from the Body using snap ring pliers.

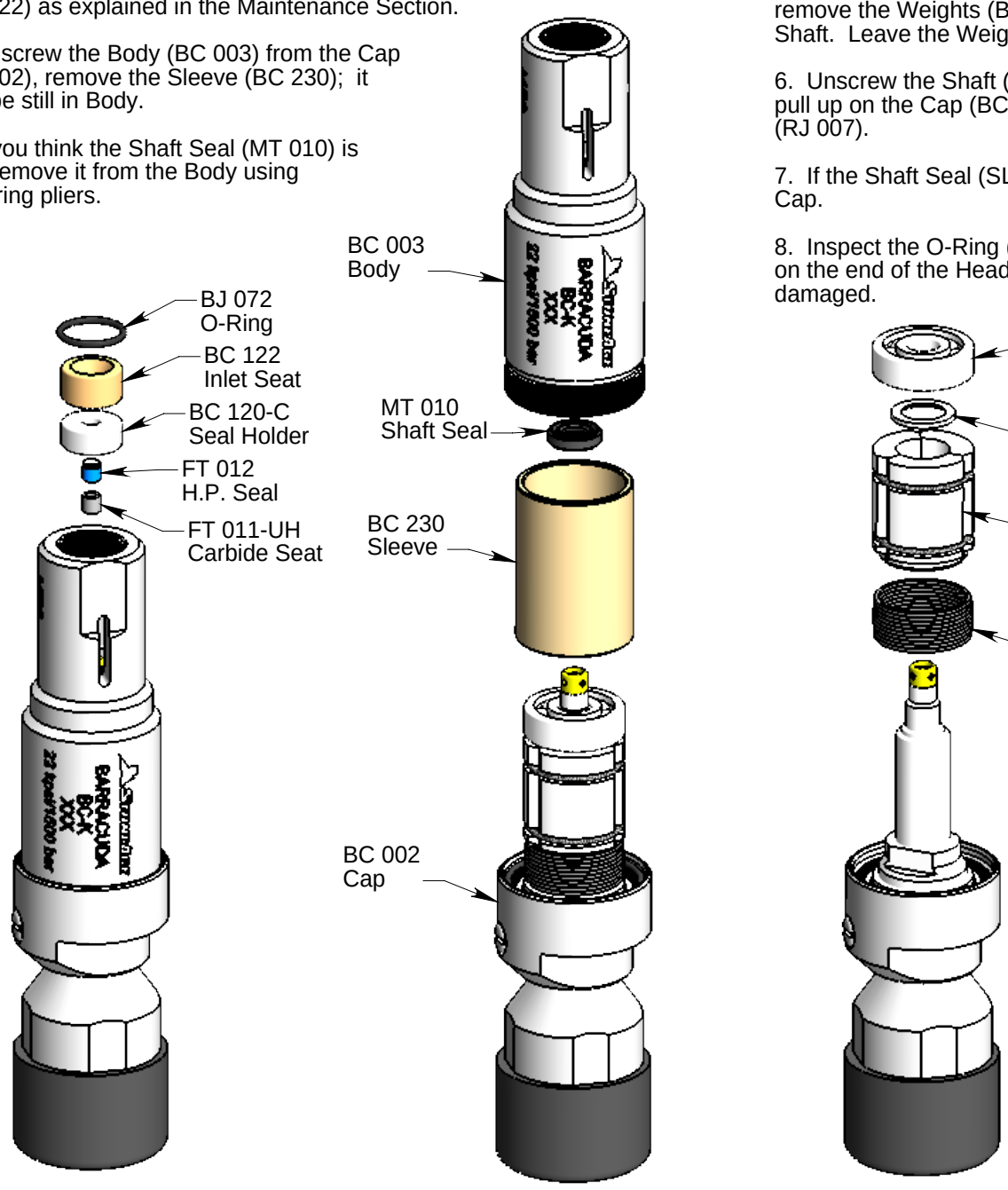

4. Pull the Bearing (BC 009) from the Shaft. Remove the Washer (BC 222).

5. Unhook the Spring (BC 315) from the hole in the Shaft, remove the Weights (BC 220) and Spring (BC 315) from the Shaft. Leave the Weights together.

6. Unscrew the Shaft (BC 001) from the Head (BC 051) and pull up on the Cap (BC 002) to remove it and the Bearing (RJ 007).

7. If the Shaft Seal (SL 010) is damaged, remove it from the Cap.

8. Inspect the O-Ring (BC 040) and Backup Ring (BC 031) on the end of the Head. Remove them only if they are damaged.

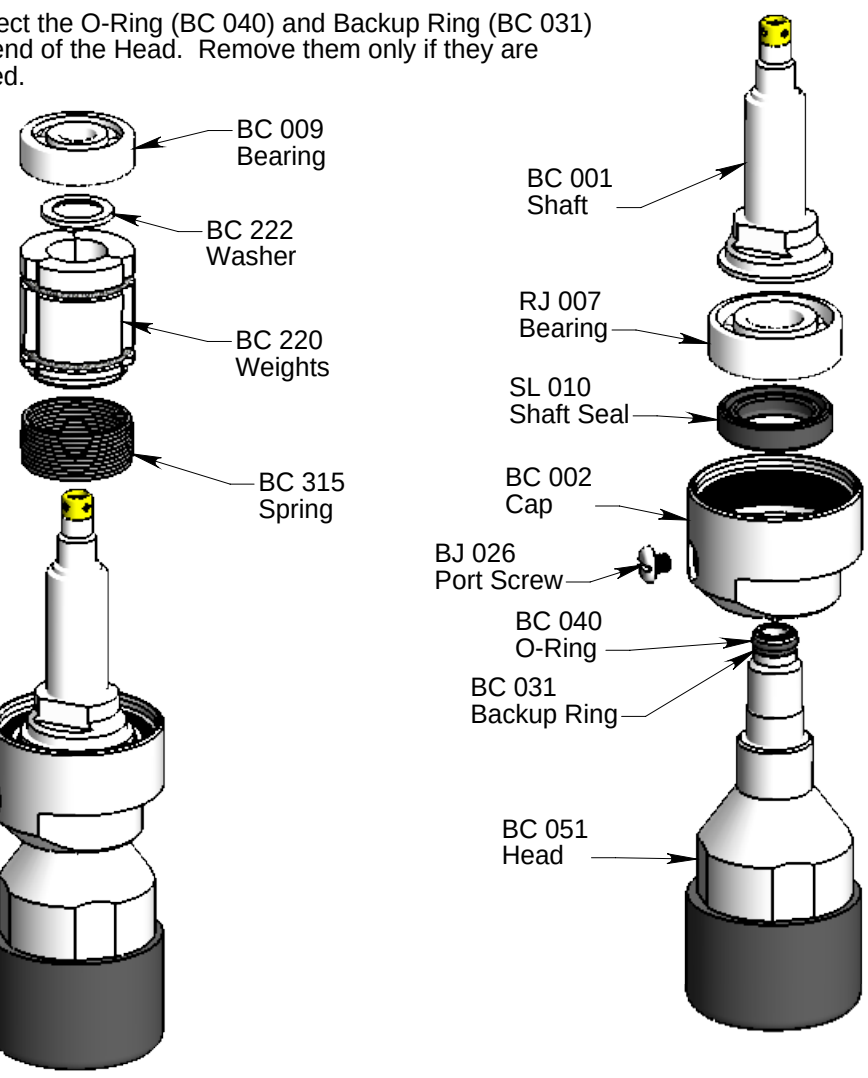

Assembly:

1. If O-Ring (BC 040) and Backup Ring (BC 031) were removed, install new ones on Head (BC 051). Note the order which they sit. Apply anti-seize to threads and grease to O-Rings.

2. Install Shaft Seal (SL 010) in Cap. Apply Armour-All to lips of seal, slide Cap with seal over Head.

3. Install Bearing (RJ 007) on Head. This is a thrust bearing, and must be installed with the wide inner race facing up.

4. Thread Shaft (BC 001) onto Head, tighten to 30 ft-lb.

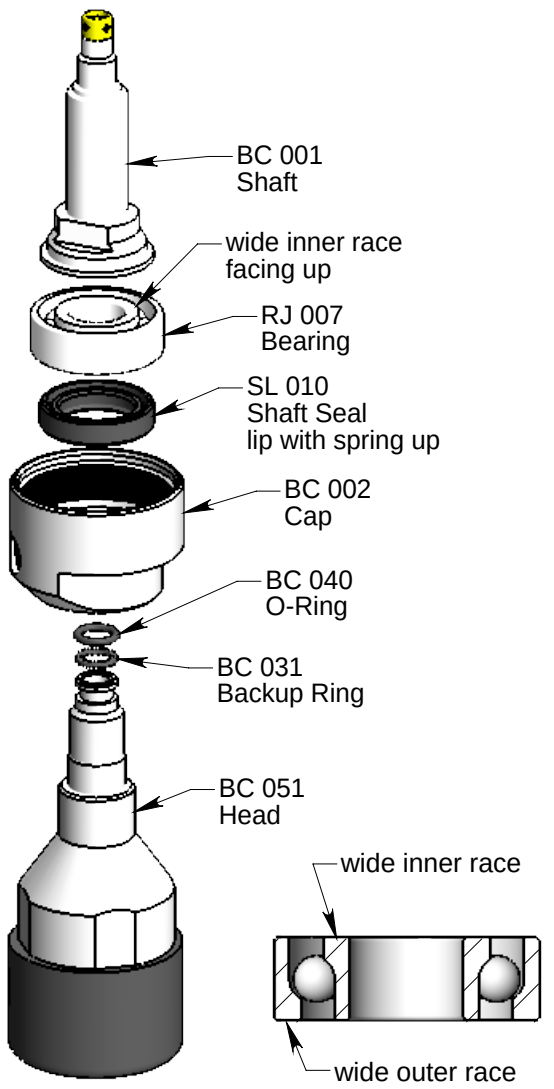

RJ 007 Bearing Detail

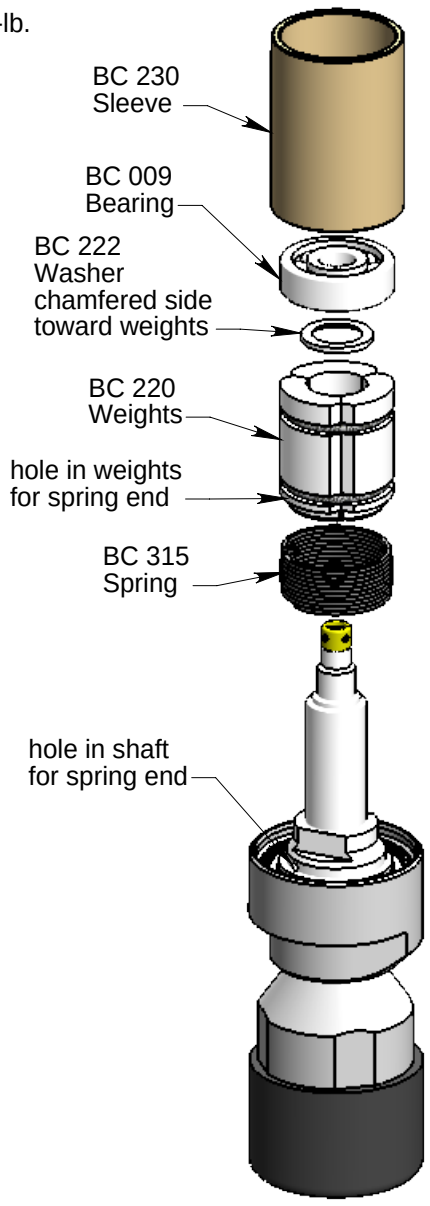

5. Insert Spring (BC 315) end into hole in Weights (BC 220), then slide Weights and Spring onto Shaft and insert other Spring end into hole in Shaft.

6. Place Washer (BC 222) on top of Weights, with chamfered face of Washer facing down toward the Weights.

7. Slide Bearing (BC 009) onto Shaft. Slide Sleeve (BC 230) over the assembly.

8. Install Shaft Seal (MT 010) into Body. Lip with spring faces toward inlet connection of Body.

9. Install O-Ring (BC 008) onto Body.

10. Apply anti-seize to threads of Body, thread into Cap. Tighten to 45 ft-lb.

11. Install the high pressure seal components as described in the Maintenance Section.

12. Fill the tool with ATF as shown in the Maintenance Section. Install Port Screw (BJ 026).

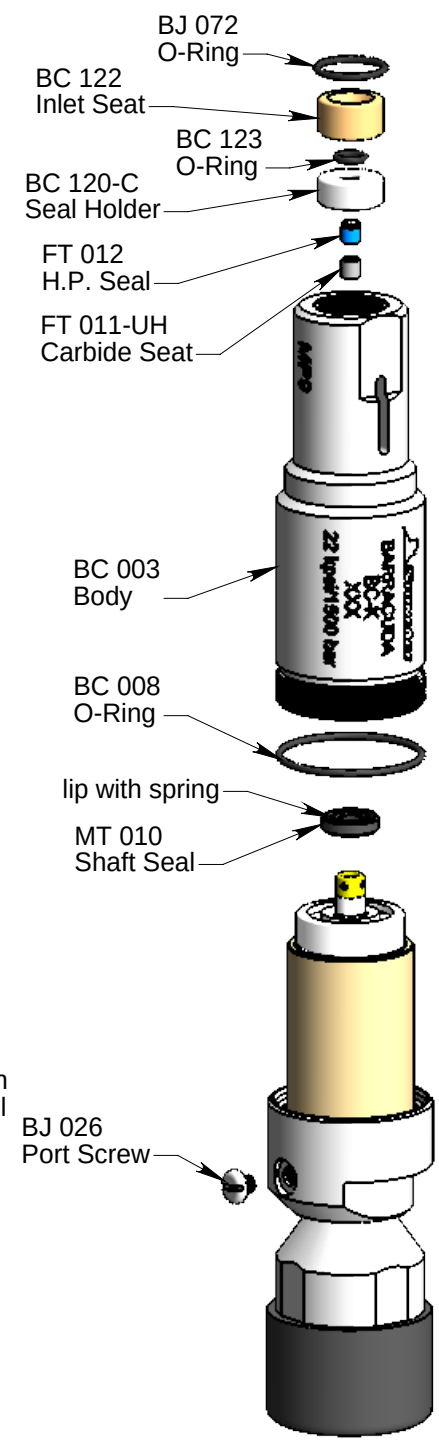

PL 514 É 07/24/2017 StoneAge[E], All Rights Reserved