GSC International Inc.
Phone: 417.374.7431
Fax: 417.374.7442
Toll Free: 888.756.4592
service@gosciencecrazy.com
2076 James River Court
Nixa, Missouri 65714

DC Motor Kit
#1858

Warning:

- **California Proposition 65 Warning: This product can expose you to chemicals including Lead, which are known to the State of California to cause cancer, birth defects, or other reproductive harm. For more information go to www.P65Warnings.ca.gov.**
- **Choking hazard – small parts**

The DC Motor Kit has been designed to give a student hands on experience with the basic construction and operation of a simple DC electric motor. Although simple in operation, the motor requires a basic understanding of how it works in order to make it work. A tiny misplacement of a brush or a bad connection in many areas of the motor will cause it to fail.

Take each step slowly and make sure that the student understands why each step is needed before they begin.

Introduction

Almost every electrical device that has something moving, uses a type of motor and a switch. Understanding how a motor works will give you a good foundation for understanding many other electrical devices as well as generators. Motors and generators are just the inverse of each other. A motor is a device that converts electrical energy into mechanical energy, and a generator is a device that converts mechanical energy into electrical energy. If a permanent magnet is used for a magnetic energy supply, then a motor can become a generator or a generator can become a motor.

Since a generator coverts mechanical energy into electrical energy, and a motor converts electrical energy into mechanical energy, is it possible that motor could be mechanically connected to the generator and the generator electrically connected to the motor in such a manner that once you started the system it could run continually with no outside infuence? Hint: Think **FRICTION!**

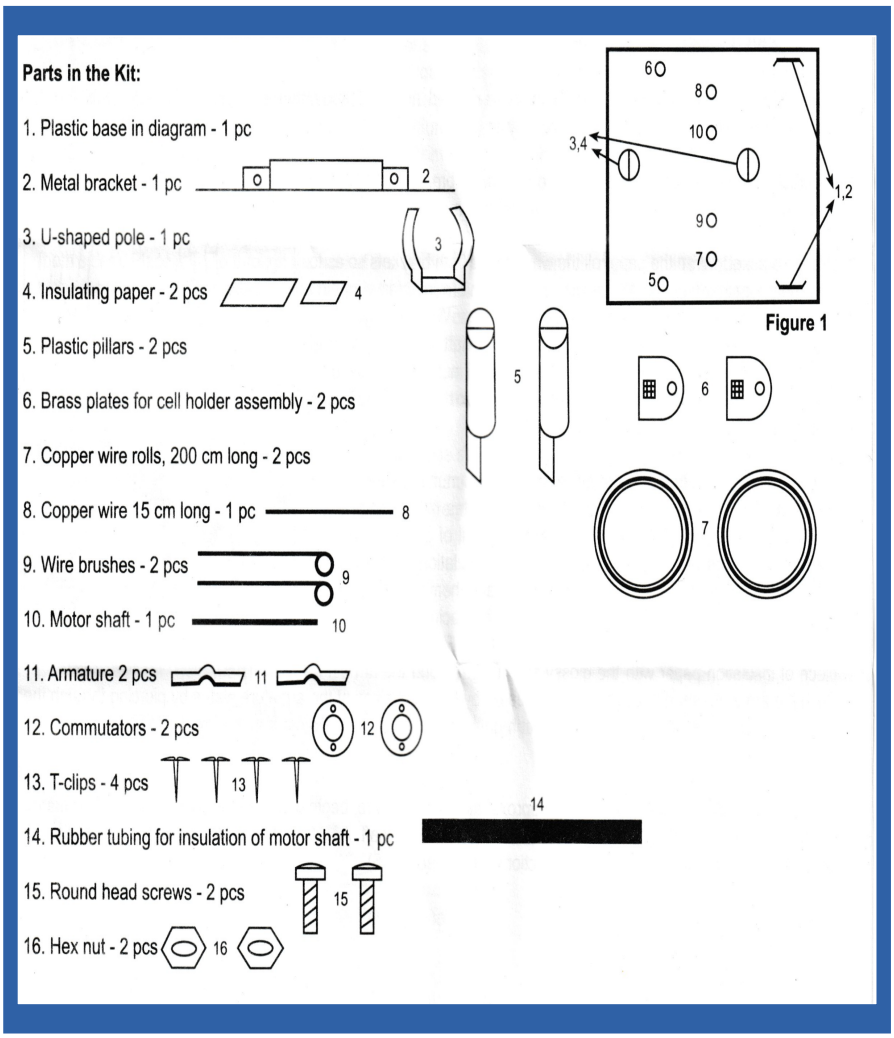

Additional Items Required (not included):
1. Sandpaper
2. AA battery
3. Scissors
4. Ruler with mm markings
5. Pliers

Assembly Instructions

1. Insert brass plates (#6) into base slots marked number 1 and number 2 (as shown in Fig. 1). These will be the connection plates for your battery. The hole in the brass plates should be on the top and extending above the slots. These holes are for the connection of wire.

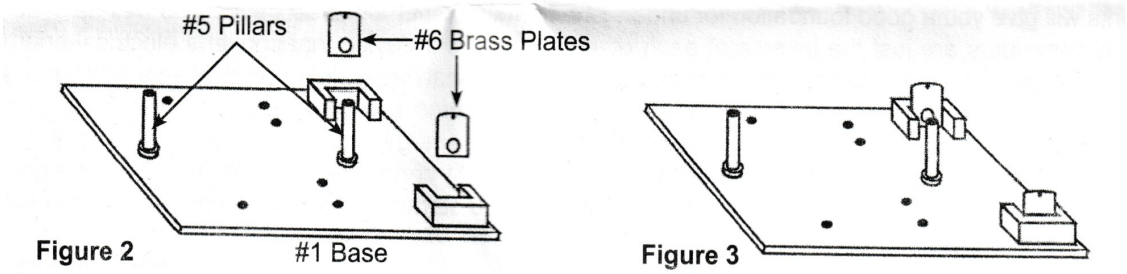

Figure 2 Figure 3

2. Insert the two posts (#5) in the holes of the base marked number 3 and number 4 (see Fig. 1) as shown in Figures 2 and 3. These posts will hold the armature shaft.

3. Attach the "U" shaped bracket (#3) to the metal bracket (#2) by first wrapping the smaller piece of insulation paper (#4) around both brackets with the glossy side down. If the paper is too wide, trim to fit the "U" shaped bracket. Wrap the paper all the way around both brackets so as to bind them together (see Fig. 4). Leaving about 4cm of wire, start wrapping one of the coils of magnet wire around both brackets. When you get close to the end of the roll, stop when you have about 8cm left. Place the bracket on the base, lining up the holes marked number 5 and number 6 (see Fig. 1) on the base and as in the illustration. Place screws into the holes and thread on the hex nuts from the underside of the base.

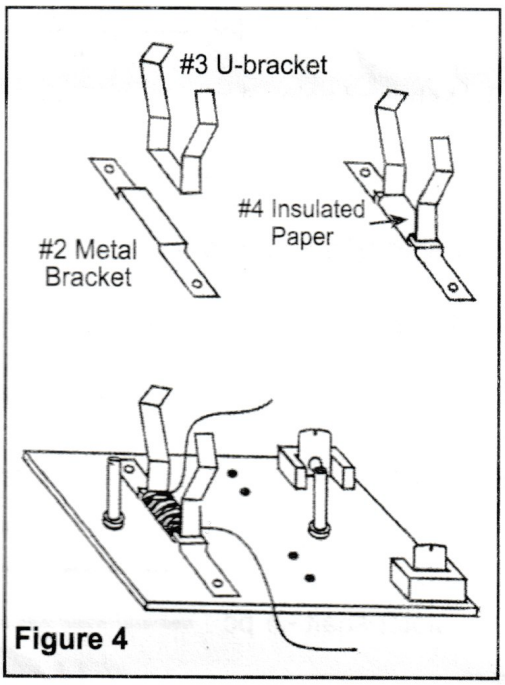

Figure 4

4.You will now construct the armature and the commutator. Refer to the Part List (Fig. 1). You will need both armature plates (#11), motor shaft (#10), bigger piece of insulating paper (4), one coil of copper wire (#7), both commutators (#12), and a plastic sleeve for insulation of motor shaft (#14). Take the two armature plates (#11) and place them together in such a way that the protrusions (bumps in the center) are facing outward, which causes a hole to be formed for the motor shaft. (See Fig. 5). Wrap the big piece of insulation paper with the glossy side down around the armature. Pu8sh the armature shaft through the hole created by the two halves of the armature plates by piercing through the insulated paper. Push the motor shaft through until it is approximately 1.5cm from the front edge of the armature plates.

Take a second coil of wire and leaving approximately 4cm of wire, begin wrapping the wire around the armature. Try to keep the number of wraps even on both sides of the shaft. as you get close to the end of the coil, leave approximately 4cm of wire to make connections later (see Fig. 5)

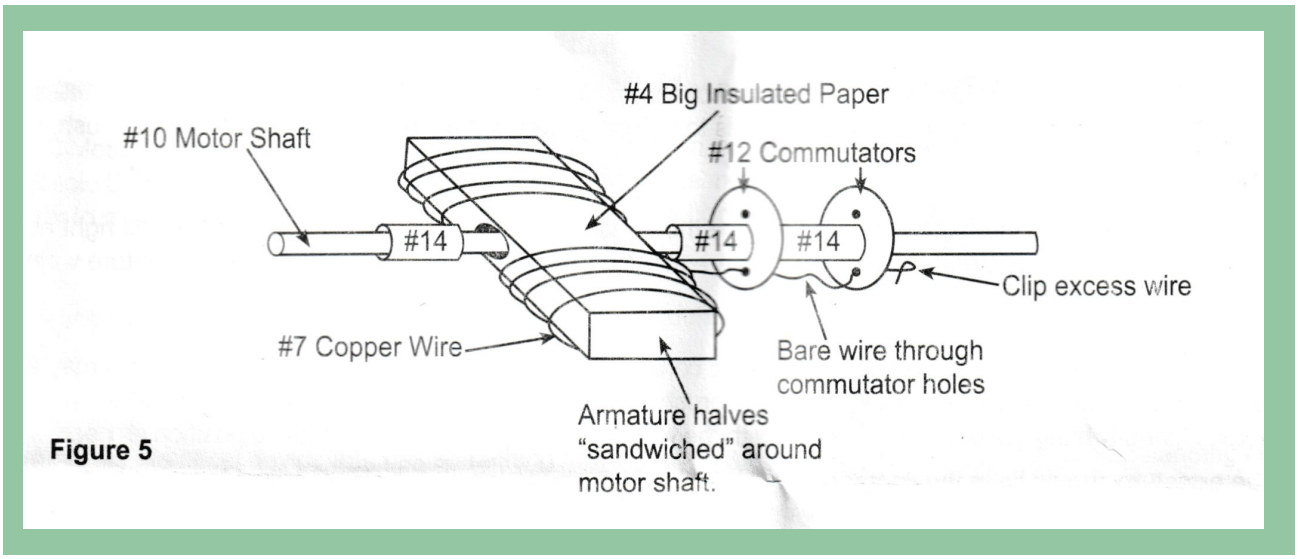

Figure 5

Next take the plastic tube and cut four pieces from it: one 1cm, one 8mm, and two 6mm pieces. Slide the 6mm piece first onto the shorter end of the shaft so that it touches the armature assembly. Then on the longer end, slide in the following sequence: 6mm sleeve, commutator, 1cm sleeve, commutator, 8mm sleeve (see Fig. 5). After this, the loose ends of the wire that you wound on the armature need to be sanded and put through the holes of the commutator (see Fig. 5). The wire at one end can go through the holes on one side of the commutators and the wire at the other end can go through the other side. After the wires are in the commutator, clip and bend back the wires to secure them in place so the whole motor can spin. Your armature and commutator assembly is now ready. This should be placed on the grooves of the plastic pillars. The armature should now rest in between the arms of the "U" shaped pole. Ensure that the armature does not touch the pole. If it does, just push the arms of the pole away from the armature with your hands. Trim the rubber tubing if the motor shaft is tight against the support pillars and commutator to allow for easy rotation.

5. You will now set up the wire brushes (#9) and clips (#13). Using the sandpaper, sand the ends of the brushes (both sides). Place a T-Clip through the hole of one of the wire burshes and then place the end of the clip down through hole number 7 (labeled in Fig. 1). On the bottom side of the base, spread the clip apart and then flatten so that it holds the wire brush in place. After securing T-Clip through the hole of the brush, the wire is threaded through the second T-Clip and now the T-Clip is secured in hold 9. The wire brush is bent slightly so it contacts the wires in the commutator. Repeat for the other side of the armature by using holes number 8 and 10 (labeled in Fig. 1). The wire brushes should rest on the copper wire between the two commutators. If they don't, adjust them.

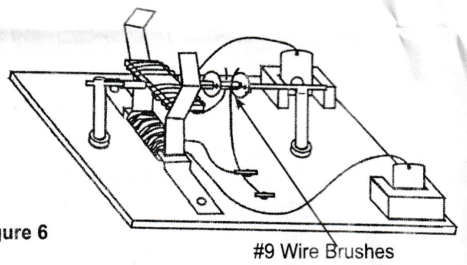

Figure 6

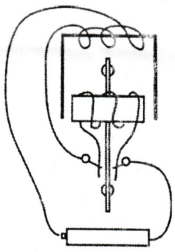
Top-view Diagram

6. Finally, you are now going to make the connections. Use sand paper to sand the coating from the wire coming from the free ends of the "U" shaped bracket. Connect one of these ends to the base of one of the wire brushes. The other wire end is to be connected to one of the battery plates by threading it through the hole on top and wrapping it together.

Take the last piece of copper wire, which is about 15cm long, sand the ends, and thread one end through the other brass battery connector. The other end of this wire is to be connected to the base of the remaining wire brush (See Fig. 6).

Place one AA battery into the batter holder and give the armature a spin. If the motor does not take off right away, check for proper connections and that the brushes are making contact with the bare spots on the armature wires.

Troubleshooting

- Adjust the brushes to ensure connection with the commutator wires. Too much pressure on the wires may slow down or halt rotation. Have one partner hold the brush away from the commutator wires while the other spins the motor. Carefully bring the brush into contact with the wires. Make small adjustments to the position as necessary.
- The armature should lie in the center of the "U" bracket without touching the sides. Adjust by bending the arms of the "U" bracket apart until the armature assembly can spin.
- Make sure all electrical contacts are properly sanded.
- If the motor does not rotate, try to spin it in the opposite direction.
- Check rubber insulation tubing.