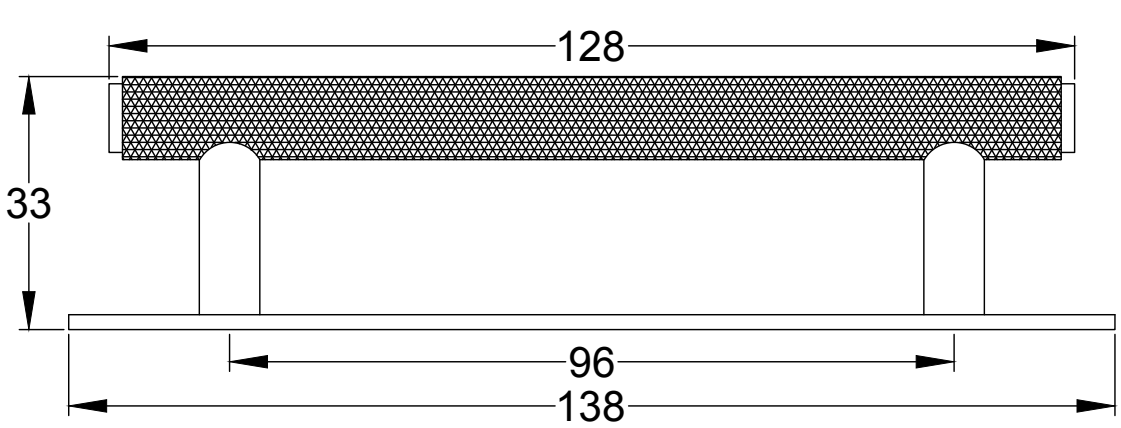

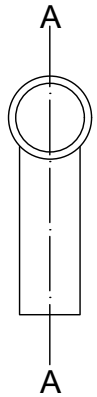

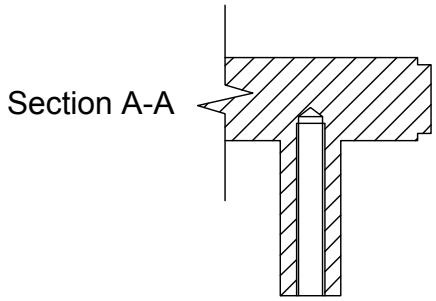

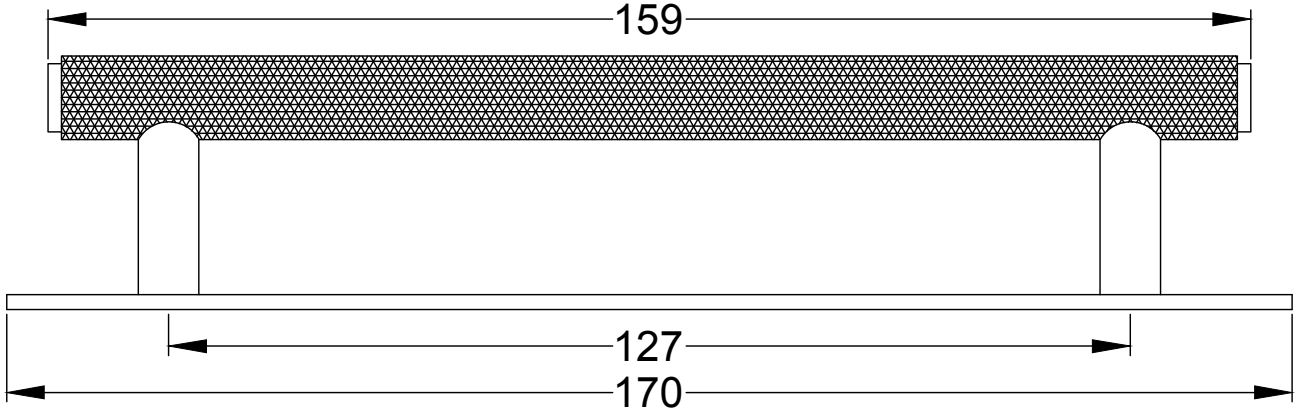

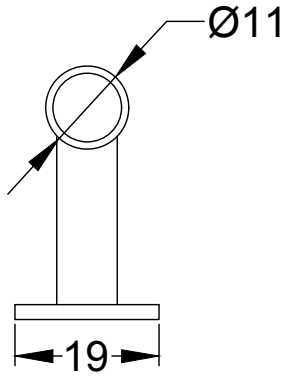

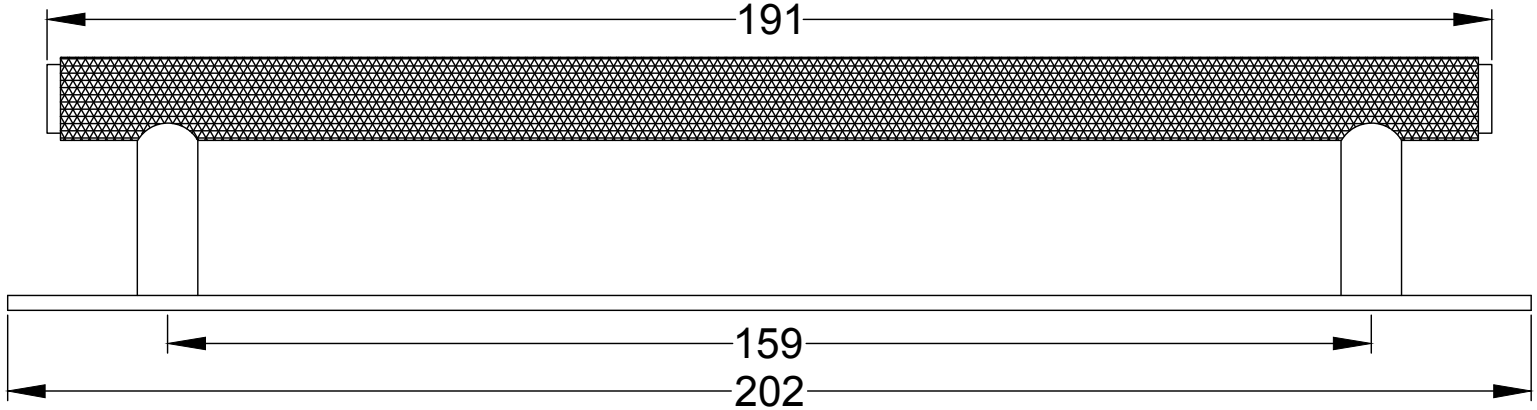

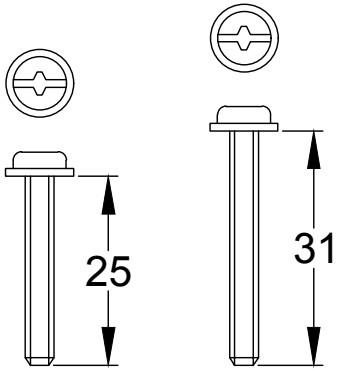

Suffolk Latch Co
suffolklatchcompany.co.uk