MITSUBISHI ELECTRIC

ecodan

Cylinder unit

Гидромодуль с накопительным баком ГВС

EHPT series ERPT series
EHST series ERST series

OPERATION MANUAL	FOR USER	English
BEDIENUNGSHANDBUCH	FÜR BENUTZER	Deutsch
MANUEL D'UTILISATION	POUR L'UTILISATEUR	Français
BEDIENINGSHANDLEIDING	VOOR DE GEBRUIKER	Nederlands
MANUAL DE INSTRUCCIONES	PARA EL USUARIO	Español
ISTRUZIONI DI FUNZIONAMENTO	PER L'UTENTE	Italiano
ΕΓΧΕΙΡΙΔΙΟ ΟΔΗΓΙΩΝ ΧΡΗΣΕΩΣ	ΓΙΑ ΤΟΝ ΧΡΗΣΤΗ	Ελληνικά
MANUAL DE OPERAÇÃO	PARA O UTILIZADOR	Português
DRIFTSMANUAL	TIL BRUGER	Dansk
DRIFTSMANUAL	FÖR ANVÄNDAREN	Svenska
IŞLETME ELKİTABI	KULLANICI İÇİN	Türkçe
РУКОВОДСТВО ПО ЭКСПЛУАТАЦИИ	ДЛЯ ПОЛЬЗОВАТЕЛЯ	Русский
ПОСІБНИК З ЕКСПЛУАТАЦІЇ	ДЛЯ КОРИСТУВАЧА	Українська
РЪКОВОДСТВО ЗА ЕКСПЛОАТАЦИЯ	ЗА ПОТРЕБИТЕЛЯ	Български
INSTRUKCJA OBSŁUGI	INFORMACJA DLA UŻYTKOWNIKA	Polski
BRUKSANVISNING	FOR BRUKER	Norsk
KÄYTTÖOPAS	KÄYTTÄJÄLLE	Suomi
PROVOZNÍ PŘÍRUČKA	PRO UŽIVATELE	Čeština
NÁVOD NA OBSLUHU	PRE POUŽÍVATEĽA	Slovenčina
HASZNÁLATI KÉZIKÖNYV	A FELHASZNÁLÓNAK	Magyar
NAVODILA ZA UPORABO	ZA UPORABNIKA	Slovenščina
MANUAL DE UTILIZARE	PENTRU UTILIZATOR	Română
KASUTUSJUHEND	KASUTAJALE	Eesti
LIETOŠANAS ROKASGRĀMATA	LIETOTĀJIEM	Latviski
NAUDOJIMO VADOVAS	SKIRTA NAUDOTOJUI	Lietuviškai
PRIRUČNIK ZA RUKOVANJE	ZA KORISNIKA	Hrvatski
UPUTSTVO ZA RUKOVANJE	ZA KORISNIKA	Srpski

Contents

For safe and correct use, read this manual and the outdoor unit installation manual thoroughly before installing the cylinder unit. English is the original language. The other languages versions are translation of the original.

en

http://www.mitsubishielectric.com/ldg/ibim/

If you want more information that is not written in this manual, go to the above website to download manuals, select model name, then choose language.

■ **Heat pumps certification**

The mark "NF heat pumps" is an independent certification program proving that heat pumps' performances and production quality of the factory conform with the certification reference NF-414. The combinations of indoor units and outdoor units, and the applications certified to use the NF PAC mark can be consulted on the website www.marque-nf.com

Accessories (Included)			
Adjustable feet	Immersion heater boss tool	SD memory card	Copper liner for DHW pipe
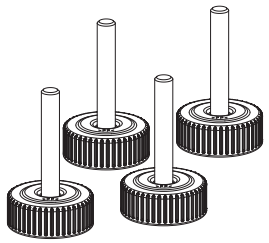	EHPT**X-MHEDW model only 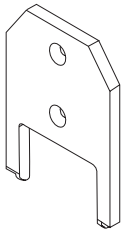	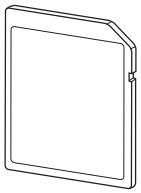	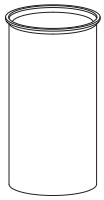
4	1	1	2

Abbreviations and glossary

No.	Abbreviations/Word	Description
1	Compensation curve mode	Space heating incorporating outdoor ambient temperature compensation
2	COP	Coefficient of Performance the efficiency of the heat pump
3	Cylinder unit	Indoor unvented DHW tank and component plumbing parts
4	DHW mode	Domestic hot water heating mode for showers, sinks, etc
5	Flow temperature	Temperature at which water is delivered to the primary circuit
6	Freeze stat. function	Heating control routine to prevent water pipes freezing
7	FTC	Flow temperature controller, the circuit board in charge of controlling the system
8	Heating mode	Space heating through radiators or Underfloor heating
9	Legionella	Bacteria potentially found in plumbing, showers and water tanks that may cause Legionnaires disease
10	LP mode	Legionella prevention mode – a function on systems with water tanks to prevent the growth of legionella bacterium
11	Packaged model	Plate heat exchanger (Refrigerant - Water) in the outdoor heat pump unit
12	PRV	Pressure relief valve
13	Return temperature	Temperature at which water is delivered from the primary circuit
14	Split model	Plate heat exchanger (Refrigerant - Water) in the indoor unit
15	TRV	Thermostatic radiator valve – a valve on the entrance or exit of the radiator panel to control the heat output
16	Cooling mode	Space cooling through fan-coils or underfloor cooling

1 Safety Notices

Please read the following safety precautions carefully.

⚠ WARNING: Precautions that must be observed to prevent injuries or death.	⚠ CAUTION: Precautions that must be observed to prevent damage to unit.

This installation manual along with the user manual should be left with the product after installation for future reference.
Mitsubishi Electric is not responsible for the failure of locally-supplied parts.

- **Be sure to perform periodical maintenance.**
- **Be sure to follow your local regulations.**
- **Be sure to follow the instructions provided in this manual.**

⚠ WARNING
Mechanical
The cylinder unit and outdoor unit must not be installed, disassembled, relocated, altered or repaired by the user. Ask an authorised installer or technician. If the unit is installed improperly or modified after installation by the user water leakage, electric shock or fire may result.
The outdoor unit should be securely fixed to a hard level surface capable of bearing its weight.
The cylinder unit should be positioned on a hard level surface capable of supporting its filled weight to prevent excessive sound or vibration.
Do not position furniture or electrical appliances below the outdoor unit or cylinder unit.
The discharge pipework from the emergency devices of the cylinder unit should be installed according to local law.
Only use accessories and replacement parts authorised by Mitsubishi Electric ask a qualified technician to fit the parts.
Electrical
All electrical work should be performed by a qualified technician according to local regulations and the instructions given in this manual.
The units must be powered by a dedicated power supply and the correct voltage and circuit breakers must be used.
Wiring should be in accordance with national wiring regulations. Connections must be made securely and without tension on the terminals.
Earth unit correctly.
General
Keep children and pets away from both the cylinder unit and outdoor unit.
Do not use the hot water produced by the heat pump directly for drinking or cooking. This could cause illness to the user.
Do not stand on the units.
Do not touch switches with wet hands.
Annual maintenance checks on both the cylinder unit and the outdoor unit should be conducted by a qualified person.
Do not place containers with liquids on top of the cylinder unit. If they leak or spill onto the cylinder unit damage to the unit and/or fire could occur.
Do not place any heavy items on top of the cylinder unit.
When installing, relocating, or servicing the cylinder unit, use only the specified refrigerant (R410A) to charge the refrigerant lines. Do not mix it with any other refrigerant and do not allow air to remain in the lines. If air is mixed with the refrigerant, then it can be the cause of abnormal high pressure in the refrigerant line, and may result in an explosion and other hazards. The use of any refrigerant other than that specified for the system will cause mechanical failure or system malfunction or unit breakdown. In the worst case, this could lead to a serious impediment to securing product safety.
In heating mode, to avoid the heat emitters being damaged by excessively hot water, set the target flow temperature to a minimum of 2ºC below the maximum allowable temperature of all the heat emitters. For Zone2, set the target flow temperature to a minimum of 5ºC below the maximum allowable flow temperature of all the heat emitters in Zone2 circuit.
Do not install the unit where combustible gases may leak, be produced, flow, or accumulate. If combustible gas accumulates around the unit, fire or explosion may result.

⚠ CAUTION
Use clean water that meets local quality standards on the primary circuit.
The outdoor unit should be installed in an area with sufficient airflow according to the diagrams in the outdoor unit installation manual.
The cylinder unit should be located inside to minimise heat loss.
Water pipe-runs on the primary circuit between outdoor and indoor unit should be kept to a minimum to reduce heat loss.
Ensure condensate from outdoor unit is piped away from the base to avoid puddles of water.
Remove as much air as possible from the primary and DHW circuits.
Refrigerant leakage may cause suffocation. Provide ventilation in accordance with EN378-1.
Be sure to wrap insulation around the piping. Direct contact with the bare piping may result in burns or frostbite.
Never put batteries in your mouth for any reason to avoid accidental ingestion.
Battery ingestion may cause choking and/or poisoning.
Install the unit on a rigid structure to prevent excessive sound or vibration during operation.
Do not transport the cylinder unit with water inside the DHW tank. This could cause damage to the unit.
If power to the cylinder unit is to be turned off (or system switched off) for a long time, the water should be drained.
If unused for a long period, before operation is resumed, DHW tank should be flushed through with potable water.
Preventative measures should be taken against water hammer, such as installing a Water Hammer Arrestor on the primary water circuit, as directed by the manufacturer.

As for the handling of refrigerant, refer to the outdoor unit installation manual.

2 Introduction

The purpose of this installation manual is to instruct competent persons how to safely and efficiently install and commission the cylinder unit system. The target readers of this manual are competent plumbers and/or refrigeration engineers who have attended and passed the requisite Mitsubishi Electric product training and have appropriate qualifications for installation of an unvented hot water cylinder unit specific to their country.

■ Product specification

Model name				EHST17D-VM2D	ERST17D-VM2D	EHST20D-MED	EHST20D-VM2D	EHST20D-VM6D	EHST20D-YM9D	EHST20D-YM9ED	EHST20D-TM9D	ERST20D-VM2D	EHST30D-MED
Nominal domestic hot water volume				170 L		200 L							300 L
Overall unit dimensions (Height × Width × Depth)				1400 × 595 × 680 mm		1600 × 595 × 680 mm							2050 × 595 × 680 mm
Weight (empty)				93 kg		98 kg	104 kg	105 kg	106 kg	101 kg	106 kg	104 kg	113 kg
Weight (full)				269 kg		304 kg	310 kg	311 kg	314 kg	309 kg	314 kg	310 kg	420 kg
Water volume of heating circuit in the unit *1				3.4 L		3.5 L			5.8 L			3.5 L	3.9 L
Plate heat exchanger (MWA2)				—									
Plate heat exchanger (MWA1)				✔	✔	✔	✔	✔	✔	✔	✔	✔	✔
Unvented expansion vessel(Primary heating)		Nominal volume		12 L		—	12 L			—	12 L		—
		Charge pressure		0.1 MPa		—	0.1 MPa			—	0.1 MPa		—
Safety device	Primary circuit	Control thermistor		1 - 80°C									
		Pressure relief valve		0.3 MPa (3bar)									
		Flow sensor		Min. flow 5.0 L/min									
		BH manual reset thermostat		90°C		—	90°C						—
		BH thermal Cut Off		121°C		—	121°C						—
	DHW tank	Control thermistor		75°C									
		IH manual reset thermostat		—									
		Temperature & pressure relief valve		—									
Primary circuit circulating Pump				Grundfos UPM3 15-75 130	Grundfos UPM3K 15-75 130	Grundfos UPM3 15-75 130						Grundfos UPM3K 15-75 130	Grundfos UPM3 15-75 130
Sanitary circuit circulating Pump				Grundfos UPSO 15-60 130 CIL2									
Connections	Water	Primary circuit		ø28 mm									
		DHW circuit		ø22 mm									
	Refrigerant (R410A)	Liquid		6.35 mm				9.52 mm	6.35 mm				
		Gas		12.7 mm				15.88 mm	12.7 mm				
Operating range	Heating	Room temperature		10 - 30 °C									
		Flow temperature		20 - 60 °C									
	Cooling	Room temperature		—									
		Flow temperature		—	5 - 25 °C	—		5 - 25 °C	—			5 - 25 °C	—
Guaranteed operating range *2	Ambient			0 - 35°C (≦ 80 %RH)									
	Outdoor temperature	Heating		See outdoor unit spec table.									
		Cooling		—	See outdoor unit spec table. (min. 10°C) *3	—						See outdoor unit spec table. (min. 10°C) *3	—
DHW tank performance	Declared load profile			L									XL
	Average climate	η_{wh} (water heating efficiency)		135 - 148		141 - 159							119 - 128
		P_{es} (standby power input) [kW]		0.026 - 0.039		0.024 - 0.035							0.026 - 0.041
		Water heater energy efficiency class		A+									
Electrical data	Control board (Including 4 pumps)	Power supply (Phase, voltage, frequency)		~/N, 230 V, 50 Hz									
		Input		0.30 kW									
		Current		1.95 A									
		Breaker		10 A									
	Booster heater	Power supply (Phase, voltage, frequency)		~/N, 230 V, 50 Hz		—	~/N, 230 V, 50 Hz		3~, 400 V, 50 Hz		3~, 230 V, 50 Hz	~/N, 230 V, 50 Hz	—
		Capacity		2 kW		—	2 kW	2 kW +4 kW	3 kW +6 kW			2 kW	—
		Heater step		1		—	1	3				1	—
		Current		9 A		—	9 A	26 A	13 A		23 A	9 A	—
		Breaker		16 A		—	16 A	32 A	16 A		32 A	16 A	—
	Immersion heater	Power supply (Phase, voltage, frequency)		—	—	—	—	—	—		—	—	—
		Capacity		—	—	—	—	—	—		—	—	—
		Current		—	—	—	—	—	—		—	—	—
		Breaker		—	—	—	—	—	—		—	—	—
Sound power level (PWL)				41 dB(A)									

<Table 3.1>

*1 Volume of sanitary water circuit, primary DHW circuit (from 3-way valve to confluent point with heating circuit), piping to expansion vessel, and expansion vessel are not included in this value.

*2 The environment must be frost-free.

*3 Cooling mode is not available in low outdoor temperature. If you use our system in cooling mode at the low ambient temperature (10°C or below), there are some risks of plate heat exchanger breaking by frozen water.

*4 For the model without booster heater and immersion heater, the maximum allowable hot water temperature is [Maximum outlet water of outdoor unit -3°C]
For the maximum outlet water of outdoor unit, refer to outdoor unit data book.

*5 Do not fit immersion heaters without thermal cut-out.

■ Product specification

Model name			EHST30D-VM6ED	EHST30D-YM9ED	EHST30D-TM9ED	ERST30D-VM2ED	EHST20C-MED	EHST20C-VM2D	EHST20C-VM6D	EHST20C-YM9D	EHST20C-YM9ED	EHST20C-TM9D	ERST20C-VM2D
Nominal domestic hot water volume			300 L				200 L						
Overall unit dimensions (Height × Width × Depth)			2050 × 595 × 680 mm				1600 × 595 × 680 mm					1600 × 595 × 680 mm	
Weight (empty)			115 kg	116 kg		114 kg	106 kg	113 kg	114 kg	115 kg	109 kg	115 kg	113 kg
Weight (full)			422 kg	425 kg		421 kg	314 kg	320 kg	321 kg	324 kg	319 kg	324 kg	320 kg
Water volume of heating circuit in the unit *1			3.9 L	6.2 L		3.9 L	4.6 L			6.9 L		6.9 L	4.6 L
Plate heat exchanger (MWA2)			—				✔	✔	✔	✔	✔	✔	✔
Plate heat exchanger (MWA1)			✔	✔	✔	✔	—						
Unvented expansion vessel(Primary heating)		Nominal volume	—					12 L			—	12 L	
		Charge pressure	—					0.1 MPa			—	0.1 MPa	
Safety device	Primary circuit	Control thermistor	1 - 80°C									1 - 80°C	
		Pressure relief valve	0.3 MPa (3bar)									0.3 MPa (3bar)	
		Flow sensor	Min. flow 5.0 L/min									Min. flow 5.0 L/min	
		BH manual reset thermostat	90°C				—	90°C					
		BH thermal Cut Off	121°C				—	121°C					
	DHW tank	Control thermistor	75°C										
		IH manual reset thermostat	—										
		Temperature & pressure relief valve	—										
Primary circuit circulating Pump			Grundfos UPM3 15-75 130			Grundfos UPM3K 15-75 130	Grundfos UPM3 15-75 130						
Sanitary circuit circulating Pump			Grundfos UPSO 15-60 130 CIL2										
Connections	Water	Primary circuit)	ø28 mm										
		DHW circuit	ø22 mm										
	Refrigerant (R410A)	Liquid	6.35 mm				9.52 mm						
		Gas	12.7 mm				15.88 mm						
Operating range	Heating	Room temperature	10 - 30 °C										
		Flow temperature	20 - 60 °C										
	Cooling	Room temperature	—										
		Flow temperature	—			5 - 25 °C	—						5 - 25 °C
Guaranteed operating range *2	Ambient		0 - 35°C (≦ 80 %RH)										
	Outdoor temperature	Heating	See outdoor unit spec table.										
		Cooling	—			See outdoor unit spec table. (min. 10°C) *3	—						See outdoor unit spec table. (min. 10°C) *3
DHW tank performance	Declared load profile		XL			L							
	Average climate	η_{wh} (water heating efficiency)	119 - 128				139 - 145						
		P_{es} (standby power input) [kW]	0.026 - 0.041				0.035						
		Water heater energy efficiency class	A - A+				A+						
Electrical data	Control board (Including 4 pumps)	Power supply (Phase, voltage, frequency)	~/N, 230 V, 50 Hz										
		Input	0.30 kW										
		Current	1.95 A										
		Breaker	10 A										
	Booster heater	Power supply (Phase, voltage, frequency)	~/N, 230 V, 50 Hz	3~, 400 V, 50 Hz	3~, 230 V, 50 Hz	~/N, 230 V, 50 Hz	—	~/N, 230 V, 50 Hz		3~, 400 V, 50 Hz		3~, 230 V, 50 Hz	~/N, 230 V, 50 Hz
		Capacity	2 kW +4 kW	3 kW +6 kW		2 kW	—	2 kW	2 kW +4 kW	3 kW + 6 kW		3 kW +6 kW	2 kW
		Heater step	3			1	—	1	3			3	1
		Current	26 A	13 A	23 A	9 A	—	9 A	26 A	13 A		23 A	9 A
		Breaker	32A	16 A	32A	16 A	—	16 A	32 A	16 A		32 A	16 A
	Immersion heater	Power supply (Phase, voltage, frequency)	—	—	—	—	—	—	—	—			
		Capacity	—	—	—	—	—	—	—	—			
		Current	—	—	—	—	—	—	—	—			
		Breaker	—	—	—	—	—	—	—	—			
Sound power level (PWL)							40 dB(A)					40 dB(A)	

<Table 3.2>

*1 Volume of sanitary water circuit, primary DHW circuit (from 3-way valve to confluent point with heating circuit), piping to expansion vessel, and expansion vessel are not included in this value.

*2 The environment must be frost-free.

*3 Cooling mode is not available in low outdoor temperature. If you use our system in cooling mode at the low ambient temperature (10°C or below), there are some risks of plate heat exchanger breaking by frozen water.

*4 For the model without booster heater and immersion heater, the maximum allowable hot water temperature is [Maximum outlet water of outdoor unit -3°C]
For the maximum outlet water of outdoor unit, refer to outdoor unit data book.

*5 Do not fit immersion heaters without thermal cut-out.

en

■ Product specification

Model name				EHST30C-MED	EHST30C-VM6ED	EHST30C-YM9ED	EHST30C-TM9ED	ERST30C-VM2ED	EHPT17X-VM2D	EHPT17X-VM6D	EHPT17X-YM9D	ERPT17X-VM2D	EHPT20X-MED	EHPT20X-VM6D
Nominal domestic hot water volume				300 L					170 L				200 L	
Overall unit dimensions (Height × Width × Depth)				2050 × 595 × 680 mm					1400 × 595 × 680 mm				1600 × 595 × 680 mm	
Weight (empty)				118 kg	120 kg	121 kg		120 kg	85 kg	86 kg	87 kg	86 kg	93 kg	101 kg
Weight (full)				426 kg	422 kg	431 kg		428 kg	261 kg	262 kg	265 kg	261 kg	300 kg	307 kg
Water volume of heating circuit in the unit *1				5.0 L		7.3 L		5.0 L	3.2 L		5.5 L	3.2 L	3.7 L	
Plate heat exchanger (MWA2)				✔	✔	✔	✔	✔						
Plate heat exchanger (MWA1)				—										
Unvented expansion vessel(Primary heating)		Nominal volume		—					12 L				—	12 L
		Charge pressure		—					0.1 MPa				—	0.1 MPa
Safety device	Primary circuit	Control thermistor		1 - 80°C										
		Pressure relief valve		0.3 MPa (3bar)										
		Flow sensor		Min. flow 5.0 L/min										
		BH manual reset thermostat		—		90°C							—	90°C
		BH thermal Cut Off		—		121°C							—	121°C
	DHW tank	Control thermistor		75°C										
		IH manual reset thermostat		—										
		Temperature & pressure relief valve		—										
Primary circuit circulating Pump				Grundfos UPM3 15-75 130				Grundfos UPM3K 15-75 130	Grundfos UPM3 15-75 130					
Sanitary circuit circulating Pump				Grundfos UPSO 15-60 130 CIL2										
Connections	Water	Primary circuit)		ø28 mm										
		DHW circuit		ø22 mm										
	Refrigerant (R410A)	Liquid		9.52 mm					—					
		Gas		15.88 mm					—					
Operating range	Heating	Room temperature		10 - 30 °C										
		Flow temperature		20 - 60 °C										
	Cooling	Room temperature		—										
		Flow temperature		—				5 - 25 °C	—			5 - 25 °C	—	
Guaranteed operating range *2	Ambient			0 - 35°C (≦ 80 %RH)										
	Outdoor temperature	Heating		See outdoor unit spec table.										
		Cooling		—				See outdoor unit spec table. (min. 10°C) *3	—			See outdoor unit spec table. (min. 10°C) *3	—	
DHW tank performance	Declared load profile			XL					L					
	Average climate	η_{wh} (water heating efficiency)		117 - 119										
		P_{es} (standby power input) [kW]		0.041 - 0.043										
		Water heater energy efficiency class		A					A+					
Electrical data	Control board (Including 4 pumps)	Power supply (Phase, voltage, frequency)		~/N, 230 V, 50 Hz										
		Input		0.30 kW										
		Current		1.95 A										
		Breaker		10 A										
	Booster heater	Power supply (Phase, voltage, frequency)		—	~/N, 230 V, 50 Hz	3~, 400 V, 50 Hz	3~, 230 V, 50 Hz	~/N, 230 V, 50 Hz			3~, 400 V, 50 Hz	~/N, 230 V, 50 Hz	—	~/N, 230 V, 50 Hz
		Capacity		—	2 kW +4 kW	3 kW +6 kW		2 kW		2 kW +4 kW	3 kW +6 kW	2 kW	—	2 kW +4 kW
		Heater step		—	3	3		1		3		1	—	3
		Current		—	26 A	13 A	23 A	9 A		26 A	13 A	9 A	—	26 A
		Breaker		—	32 A	16 A	32 A	16 A		32 A	16 A	16 A	—	32 A
	Immersion heater	Power supply (Phase, voltage, frequency)		—	—	—	—	—	—	—	—	—	—	—
		Capacity		—	—	—	—	—	—	—	—	—	—	—
		Current		—	—	—	—	—	—	—	—	—	—	—
		Breaker		—	—	—	—	—	—	—	—	—	—	—
Sound power level (PWL)				40 dB(A)										

<Table 3.3>

*1 Volume of sanitary water circuit, primary DHW circuit (from 3-way valve to confluent point with heating circuit), piping to expansion vessel, and expansion vessel are not included in this value.

*2 The environment must be frost-free.

*3 Cooling mode is not available in low outdoor temperature. If you use our system in cooling mode at the low ambient temperature (10°C or below), there are some risks of plate heat exchanger breaking by frozen water.

*4 For the model without booster heater and immersion heater, the maximum allowable hot water temperature is [Maximum outlet water of outdoor unit -3°C]
For the maximum outlet water of outdoor unit, refer to outdoor unit data book.

*5 Do not fit immersion heaters without thermal cut-out.

■ Product specification

Model name				EHPT20X-YM9D	EHPT20X-YM9ED	EHPT20X-TM9D	EHPT20X-MHEDW	ERPT20X-MD	ERPT20X-VM2D	ERPT20X-VM6D	EHPT30X-MED	EHPT30X-YM9ED	ERPT30X-VM2ED
Nominal domestic hot water volume				200 L							300 L		
Overall unit dimensions (Height × Width × Depth)				1600 × 595 × 680 mm				1600 × 595 × 680 mm			2050 × 595 × 680 mm		
Weight (empty)				102 kg	96 kg	102 kg	90 kg	99 kg	100 kg	101 kg	106 kg	109 kg	107 kg
Weight (full)				310 kg	305 kg	310 kg	296 kg	305 kg	305 kg	307 kg	413 kg	419 kg	413 kg
Water volume of heating circuit in the unit *1				6.0 kg			3.7 L	3.7 L			4.4 L	6.7 L	4.4 L
Plate heat exchanger (MWA2)				—									
Plate heat exchanger (MWA1)				—									
Unvented expansion vessel(Primary heating)		Nominal volume		12 L	—	12 L	—	12 L			—		
		Charge pressure		0.1 MPa	—	0.1 MPa	—	0.1 MPa			—		
Safety device	Primary circuit	Control thermistor		1 - 80°C									
		Pressure relief valve		0.3 MPa (3bar)									
		Flow sensor		Min. flow 5.0 L/min									
		BH manual reset thermostat		90°C			—	—	90°C		—	90°C	
		BH thermal Cut Off		121°C			—	—	121°C		—	121°C	
	DHW tank	Control thermistor		75°C									
		IH manual reset thermostat		—									
		Temperature & pressure relief valve		—									
Primary circuit circulating Pump				Grundfos UPM3 15-75 130				Grundfos UPM3K 15-75 130			Grundfos UPM3 15-75 130		
Sanitary circuit circulating Pump				Grundfos UPSO 15-60 130 CIL2									
Connections	Water	Primary circuit)		ø28 mm									
		DHW circuit		ø22 mm									
	Refrigerant (R410A)	Liquid		—									
		Gas		—									
Operating range	Heating	Room temperature		10 - 30 °C									
		Flow temperature		20 - 60 °C									
	Cooling	Room temperature		—									
		Flow temperature		—				5 - 25 °C			—		5 - 25 °C
Guaranteed operating range *2	Ambient			0 - 35°C (≦ 80 %RH)									
	Outdoor temperature	Heating		See outdoor unit spec table.									
		Cooling		—				See outdoor unit spec table. (min. 10°C) *3			—		
DHW tank performance	Declared load profile			L							XL		
	Average climate	η_{wh} (water heating efficiency)											
		P_{es} (standby power input) [kW]											
		Water heater energy efficiency class		A+							A		
Electrical data	Control board (Including 4 pumps)	Power supply (Phase, voltage, frequency)		~/N, 230 V, 50 Hz									
		Input		0.30 kW							0.34 kW		
		Current		1.95 A							2.56 A		
		Breaker		10 A									
	Booster heater	Power supply (Phase, voltage, frequency)		3~, 400 V, 50 Hz		3~, 230 V, 50 Hz	—	—	~/N, 230 V, 50 Hz		—	3~, 400 V, 50 Hz	~/N, 230 V, 50 Hz
		Capacity		3 kW +6 kW			—	—	2 kW	2 kW +4 kW	—	3 kW +6 kW	2 kW
		Heater step		3			—	—	1	3	—	3	1
		Current		13 A		23 A	—	—	9 A	26 A	—	13 A	9 A
		Breaker		16 A		32 A	—	—	16 A	32 A	—	16 A	16 A
	Immersion heater	Power supply (Phase, voltage, frequency)		—	—	—	~/N, 230 V, 50 Hz	—	—	—	—	—	—
		Capacity		—	—	—	3 kW	—	—	—	—	—	—
		Current		—	—	—	13 A	—	—	—	—	—	—
		Breaker		—	—	—	16 A	—	—	—	—	—	—
Sound power level (PWL)				40 dB(A)									

<Table 3.4>

*1 Volume of sanitary water circuit, primary DHW circuit (from 3-way valve to confluent point with heating circuit), piping to expansion vessel, and expansion vessel are not included in this value.

*2 The environment must be frost-free.

*3 Cooling mode is not available in low outdoor temperature. If you use our system in cooling mode at the low ambient temperature (10°C or below), there are some risks of plate heat exchanger breaking by frozen water.

*4 For the model without booster heater and immersion heater, the maximum allowable hot water temperature is [Maximum outlet water of outdoor unit -3°C]
For the maximum outlet water of outdoor unit, refer to outdoor unit data book.

*5 Do not fit immersion heaters without thermal cut-out.

en

■ Component Parts

<ET***-*M**D>**
(Packaged model system)

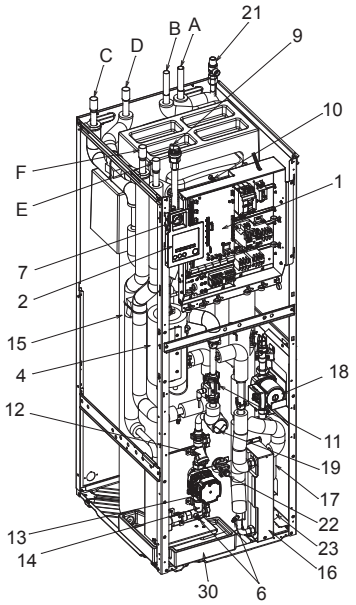

(Split model system)

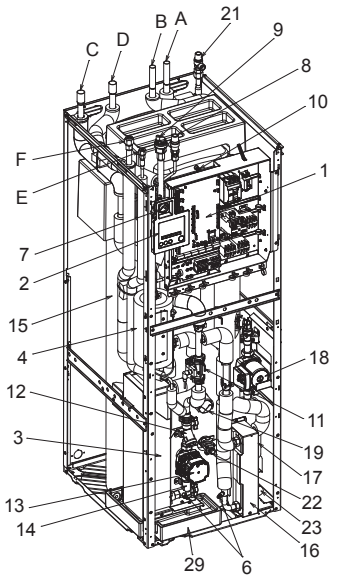

<EHPT20X-MHEDW>
(UK model system)

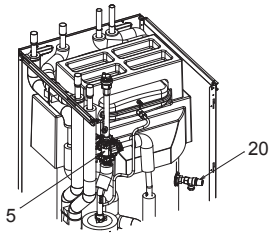

Note:
For installation of all E*PT**X-*M*ED* models, make sure to install a primary-side expansion vessel and an additional PRV to prevent the expansion vessel from burst in the field. (See figure 3.2 ~ 3.6 and 4.3.2 for further guidance)

<Figure 3.1>

No.	Part name	EHST17/20D-*M*D	EHST20/30D-*M*ED	EHST20/30D-MED	EHST20C-*M*D	EHST20/30C-*M*ED	EHST20/30C-MED	ERST17/20D-VM2D	ERST30D-VM2ED
A	DHW outlet pipe	✔	✔	✔	✔	✔	✔	✔	✔
B	Cold water inlet pipe	✔	✔	✔	✔	✔	✔	✔	✔
C	Water pipe (Space heating/cooling return connection)	✔	✔	✔	✔	✔	✔	✔	✔
D	Water pipe (Space heating/cooling flow connection)	✔	✔	✔	✔	✔	✔	✔	✔
E	Water pipe (Flow from heat pump connection)	—	✔	✔	✔	✔	✔	✔	✔
F	Water pipe (Return to heat pump connection)	—	✔	✔	✔	✔	✔	✔	✔
G	Refrigerant pipe (Gas)	—	—	—	—	—	—	—	—
H	Refrigerant pipe (Liquid)	—	—	—	—	—	—	—	—
1	Control and electrical box	✔	✔	✔	✔	✔	✔	✔	✔
2	Main remote controller	✔	✔	✔	✔	✔	✔	✔	✔
3	Plate heat exchanger (Refrigerant - Water)	✔	✔	✔	✔	✔	✔	✔	✔
4	Booster heater 1,2	✔	✔	—	✔	—	✔	✔	✔
5	3-way valve	✔	✔	✔	✔	✔	✔	✔	✔
6	Drain cock (Primary circuit)	✔	✔	✔	✔	✔	✔	✔	✔
7	Manometer	✔	✔	✔	✔	✔	✔	✔	✔
8	Pressure relief valve (3bar)	✔	✔	✔	✔	✔	✔	✔	✔
9	Automatic air vent	✔	✔	✔	✔	✔	✔	✔	✔
10	Expansion vessel (Primary circuit)	✔	—	—	✔	—	—	✔	—
11	Flow sensor	✔	✔	✔	✔	✔	✔	✔	✔
12	Strainer valve	✔	✔	✔	✔	✔	✔	✔	✔
13	Water circulation pump 1 (Primary circuit)	✔	✔	✔	✔	✔	✔	✔	✔
14	Pump valve	✔	✔	✔	✔	✔	✔	✔	✔
15	DHW tank	✔	✔	✔	✔	✔	✔	✔	✔
16	Plate heat exchanger (Water - Water)	✔	✔	✔	✔	✔	✔	✔	✔
17	Scale trap	✔	✔	✔	✔	✔	✔	✔	✔
18	Water circulation pump (Sanitary circuit)	✔	✔	✔	✔	✔	✔	✔	✔
19	Immersion heater	—	—	—	—	—	—	—	—
20	Temperature and pressure relief valve	—	—	—	—	—	—	—	—
21	Pressure relief valve (10bar) (DHW Tank)	✔	✔	✔	✔	✔	✔	✔	✔
22	Drain cock (DHW tank)	✔	✔	✔	✔	✔	✔	✔	✔
23	Drain cock (Sanitary circuit)	✔	✔	✔	✔	✔	✔	✔	✔
24	Flow water temp. thermistor (THW1)	✔	✔	✔	✔	✔	✔	✔	✔
25	Return water temp. thermistor (THW2)	✔	✔	✔	✔	✔	✔	✔	✔
26	DHW tank upper water temp. thermistor (THW5A)	✔	✔	✔	✔	✔	✔	✔	✔
27	DHW tank lower water temp. thermistor (THW5B)	✔	✔	✔	✔	✔	✔	✔	✔
28	Refrigerant liquid temp. thermistor (TH2)	✔	✔	✔	✔	✔	✔	✔	✔
29	Drain pan	—	—	✔	—	—	—	✔	✔
30	Outdoor unit	—	—	—	—	—	—	—	—
31	Drain pipe (Local supply)	—	—	—	—	—	—	—	—
32	Back flow prevention device (Local supply)	—	—	—	—	—	—	—	—
33	Isolating valve (Local supply)	—	—	—	—	—	—	—	—
34	Magnetic filter (Local supply) (Recommended)	—	—	—	—	—	—	—	—
35	Strainer (Local supply)	—	—	—	—	—	—	—	—
36	Additional PRV (Local supply)	—	—	—	—	—	—	—	—
37	Inlet control group *1	—	—	—	—	—	—	—	—
38	Filling loop (Ball valves, check valves and flexible hose) *1	—	—	—	—	—	—	—	—
39	Potable expansion vessel *1	—	—	—	—	—	—	—	—

*1 Supplied with UK model ONLY. Please refer to PAC-WK01UK-E Installation Manual for more information on accessories.

<Table 3.5>

No.	Part name	ERST20C-VM2D	ERST30C-VM2ED	EHPT17/20X-*M*D	EHPT20/30X-*M*ED	EHPT20/30X-MED	ERPT17/20X-*M*D	ERPT20X-MD	ERPT30X-VM2ED	EHPT20X-MHEDW
A	DHW outlet pipe	✔	✔	✔	✔	✔	✔	✔	✔	✔
B	Cold water inlet pipe	✔	✔	✔	✔	✔	✔	✔	✔	✔
C	Water pipe (Space heating/cooling return connection)	✔	✔	✔	✔	✔	✔	✔	✔	✔
D	Water pipe (Space heating/cooling flow connection)	✔	✔	✔	✔	✔	✔	✔	✔	✔
E	Water pipe (Flow from heat pump connection)	—	—	✔	✔	✔	✔	✔	✔	✔
F	Water pipe (Return to heat pump connection)	—	—	✔	✔	✔	✔	✔	✔	✔
G	Refrigerant pipe (Gas)	✔	✔	—	—	—	—	—	—	—
H	Refrigerant pipe (Liquid)	✔	✔	—	—	—	—	—	—	—
1	Control and electrical box	✔	✔	✔	✔	✔	✔	✔	✔	✔
2	Main remote controller	✔	✔	✔	✔	✔	✔	✔	✔	✔
3	Plate heat exchanger (Refrigerant - Water)	✔	✔	—	—	—	—	—	—	—
4	Booster heater 1,2	✔	✔	✔	✔	—	✔	—	✔	—
5	3-way valve	✔	✔	✔	✔	✔	✔	✔	✔	✔
6	Drain cock (Primary circuit)	✔	✔	✔	✔	✔	✔	✔	✔	✔
7	Manometer	✔	✔	✔	✔	✔	✔	✔	✔	✔
8	Pressure relief valve (3bar)	✔	✔	—	—	—	—	—	—	—
9	Automatic air vent	✔	✔	✔	✔	✔	✔	✔	✔	✔
10	Expansion vessel (Primary circuit)	✔	—	✔	—	—	✔	✔	—	—
11	Flow sensor	✔	✔	✔	✔	✔	✔	✔	✔	✔
12	Strainer valve	✔	✔	✔	✔	✔	✔	✔	✔	✔
13	Water circulation pump 1 (Primary circuit)	✔	✔	✔	✔	✔	✔	✔	✔	✔
14	Pump valve	✔	✔	✔	✔	✔	✔	✔	✔	✔
15	DHW tank	✔	✔	✔	✔	✔	✔	✔	✔	✔
16	Plate heat exchanger (Water - Water)	✔	✔	✔	✔	✔	✔	✔	✔	✔
17	Scale trap	✔	✔	✔	✔	✔	✔	✔	✔	✔
18	Water circulation pump (Sanitary circuit)	✔	✔	✔	✔	✔	✔	✔	✔	✔
19	Immersion heater	—	—	—	—	—	—	—	—	✔
20	Temperature and pressure relief valve	—	—	—	—	—	—	—	—	✔
21	Pressure relief valve (10bar) (DHW Tank)	✔	✔	✔	✔	✔	✔	✔	✔	—
22	Drain cock (DHW tank)	✔	✔	✔	✔	✔	✔	✔	✔	✔
23	Drain cock (Sanitary circuit)	✔	✔	✔	✔	✔	✔	✔	✔	✔
24	Flow water temp. thermistor (THW1)	✔	✔	✔	✔	✔	✔	✔	✔	✔
25	Return water temp. thermistor (THW2)	✔	✔	✔	✔	✔	✔	✔	✔	✔
26	DHW tank upper water temp. thermistor (THW5A)	✔	✔	✔	✔	✔	✔	✔	✔	✔
27	DHW tank lower water temp. thermistor (THW5B)	✔	✔	✔	✔	✔	✔	✔	✔	✔
28	Refrigerant liquid temp. thermistor (TH2)	✔	✔	—	—	—	—	—	—	—
29	Drain pan	—	—	—	—	—	—	—	—	—
30	Outdoor unit	—	—	—	—	—	✔	✔	✔	—
31	Drain pipe (Local supply)	—	—	—	—	—	—	—	—	—
32	Back flow prevention device (Local supply)	—	—	—	—	—	—	—	—	—
33	Isolating valve (Local supply)	—	—	—	—	—	—	—	—	—
34	Magnetic filter (Local supply) (Recommended)	—	—	—	—	—	—	—	—	—
35	Strainer (Local supply)	—	—	—	—	—	—	—	—	—
36	Additional PRV (Local supply)	—	—	—	—	—	—	—	—	—
37	Inlet control group *1	—	—	—	—	—	—	—	—	—
38	Filling loop (Ball valves, check valves and flexible hose) *1	—	—	—	—	—	—	—	—	—
39	Potable expansion vessel *1	—	—	—	—	—	—	—	—	—

*1 Supplied with UK model ONLY. Please refer to PAC-WK01UK-E Installation Manual for more information on accessories.

<Table 3.6>

en

<Unit: mm>

■ Technical Drawings

<E**T***-*M**D>
(Packaged model system)

DHW tank capacity	170L	200L	300L
①	1400	1600	2050

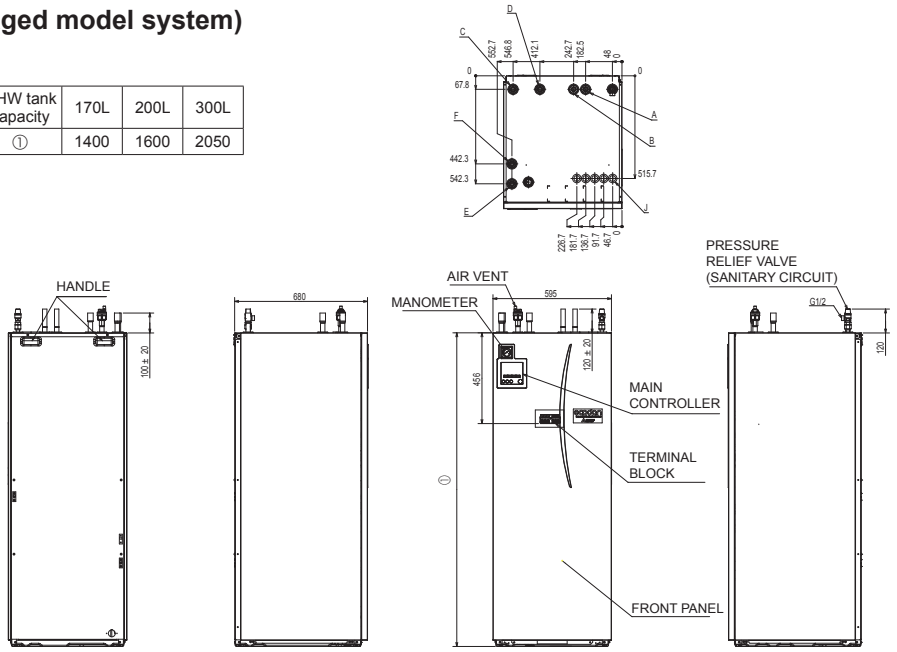

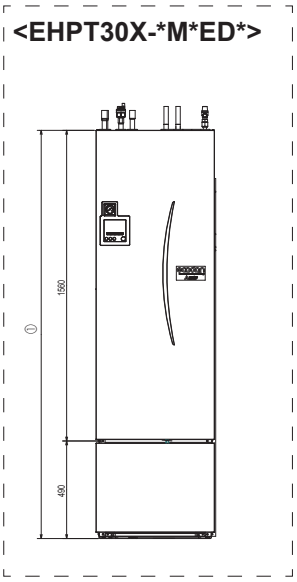

(Split model system)

DHW tank capacity	170L	200L	300L
①	1400	1600	2050

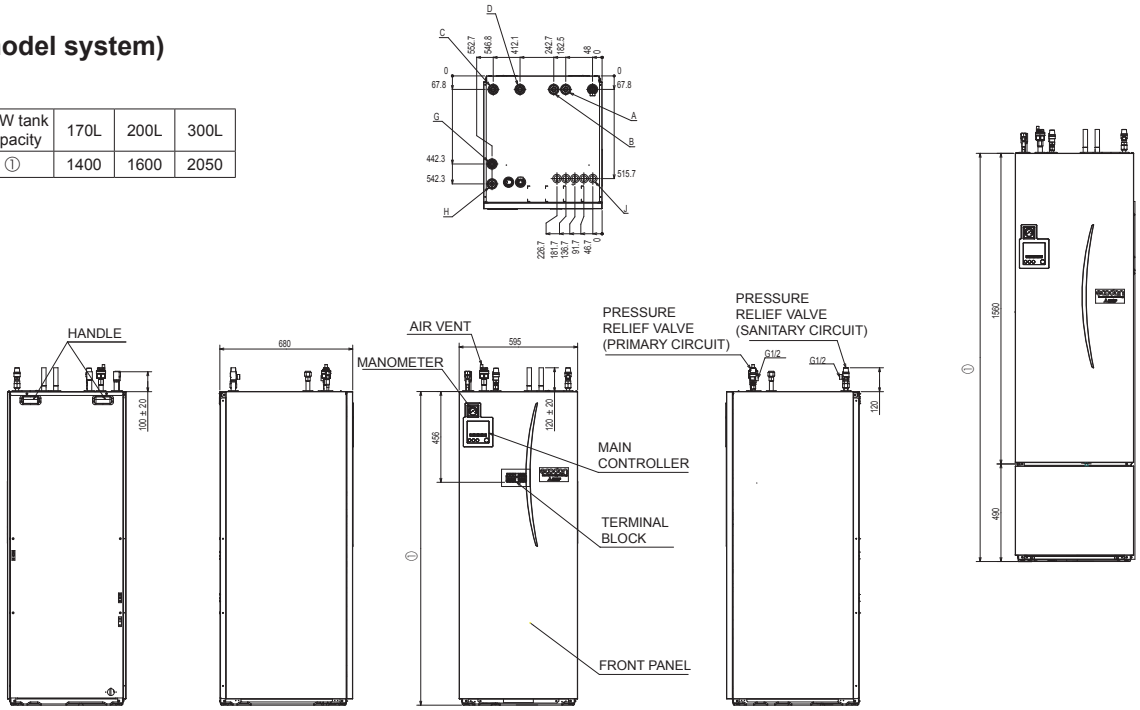

<EHPT20X-MHEDW>
(UK model system)

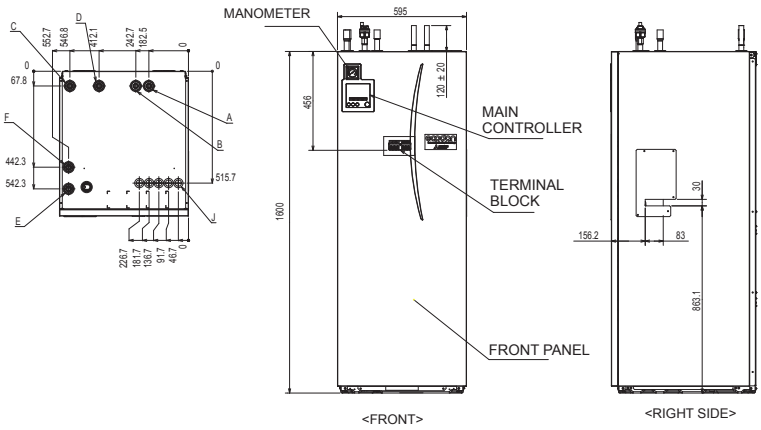

Letter	Pipe description	Connection size/type
A	DHW outlet connection	22 mm/Compression
B	Cold water inlet connection	22 mm/Compression
C	Space heating/cooling RETURN connection	28 mm/Compression
D	Space heating/cooling FLOW connection	28 mm/Compression
E	Flow connection FROM heat pump (No plate heat exchanger)	28 mm/Compression
F	Return connection TO heat pump (No plate heat exchanger)	28 mm/Compression
G	Refrigerant (GAS) (With plate heat exchanger)	12.7 mm/Flare 15.88 mm/Flare
H	Refrigerant (LIQUID) (With plate heat exchanger)	6.35 mm/Flare 9.52 mm/Flare
J	Electrical cable inlets ① ② ③ ④ ⑤	For inlets ①, ② and ③, run low-voltage wires including external input wires and thermistor wires. For inlets ④ and ⑤, run high-voltage wires including power cable, indoor-outdoor cable, and external output wires. *For a wireless receiver (option) cable and ecodan Wi-Fi interface (option) cable, use inlet ①.

<Table 3.7>

■ Water circuit diagram

• Refer to <Table 3.2> for the part names.

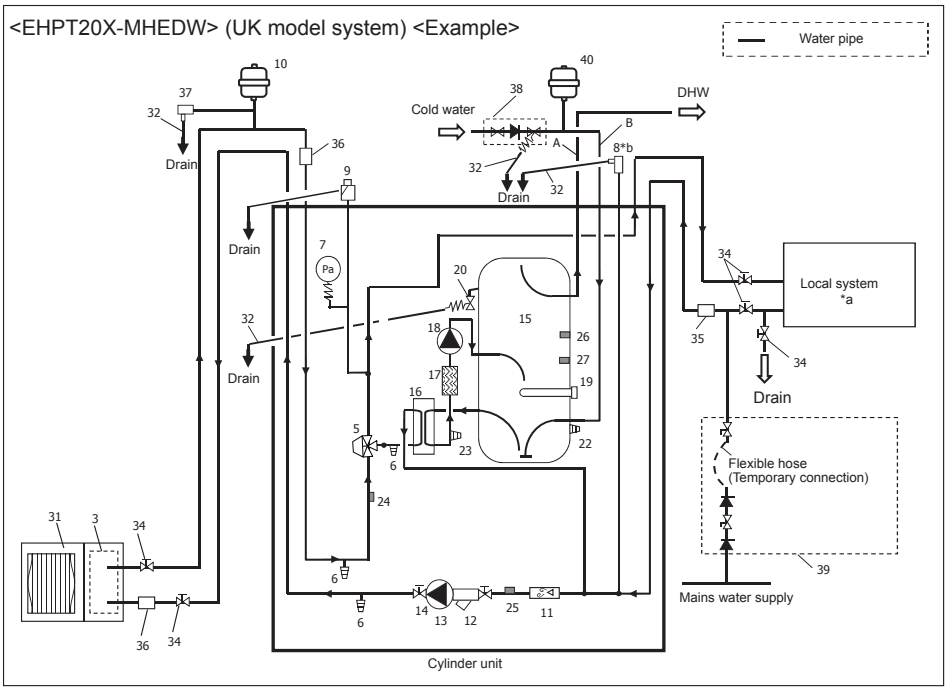

<Figure 3.2>

*a Refer to the following section [Local system].
*b Only EHPT20X

Note
- To enable draining of the cylinder unit an isolating valve should be positioned on both the inlet and outlet pipework. No valve should be fitted between the expansion valve (item 39) and the cylinder unit (safety matter).
- For space heating (primary) circuit a suitable expansion vessel **MUST** be supplied and fitted by installer. (See figure 4.3.2)
- Be sure to install a strainer on the inlet pipework to the cylinder unit.
- Suitable drain pipework should be attached to all relief valves in accordance with your country's regulations.
- When using components made from different metals or connecting pipes made of different metals insulate the joints to prevent any corrosive reaction taking place which may damage any pipework.
- Filling loop's flexible hose must be removed following the filling procedure. Item provided with unit as loose accessory.
- Install the inlet control group (item 37) above the level of the T&P relief valve (item 20). This will ensure DHW tank will not require drain-down to service/maintain the inlet control group.

Model name	EHPT20X-MHEDW
Maximum supply pressure to the pressure reducing valve	16 bar
Operating pressure (Potable side)	3.5 bar
Expansion vessel charge setting pressure (Potable side)	3.5 bar
Expansion valve setting pressure (Potable side)	6.0 bar
Immersion heater specification (Potable side) *	3000 W, 230 V
DHW tank capacity	200 L
Mass of the unit when full	298 kg
Maximum primary working pressure	2.5 bar

* EN60335/Type 3000W single phase 230V 50Hz, length 460 mm.
Use only Mitsubishi Electric service parts as a direct replacement.

<Table 3.8>

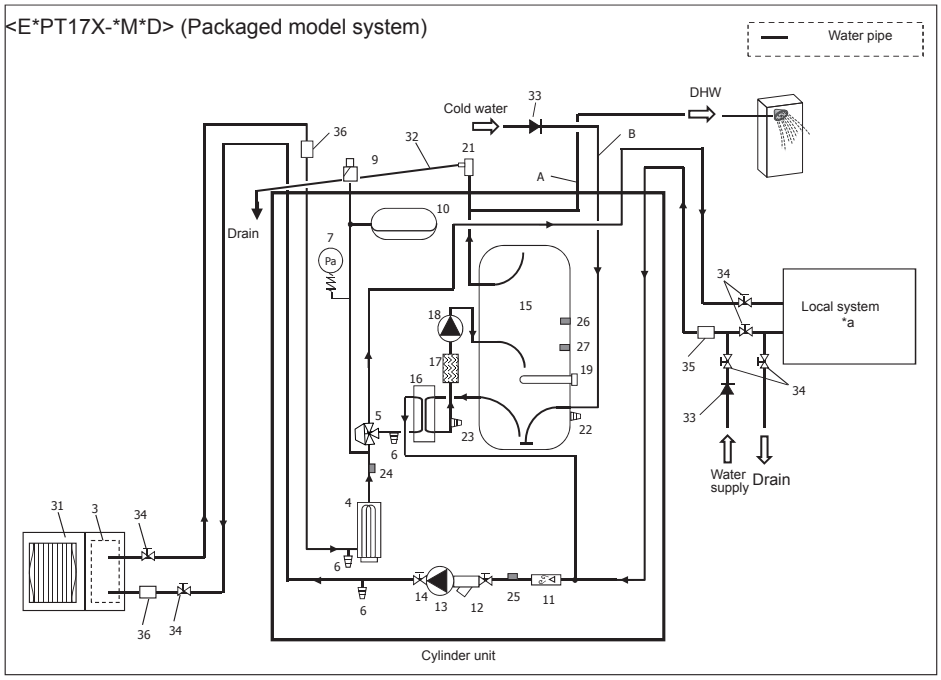

<Figure 3.3>

*a Refer to the following section [Local system].

Note
- To enable draining of the cylinder unit an isolating valve should be positioned on both the inlet and outlet pipework.
- Be sure to install a strainer on the inlet pipework to the cylinder unit.
- Suitable drain pipework should be attached to all relief valves in accordance with your country's regulations.
- A backflow prevention device must be installed on the cold water supply pipework (IEC 61770)
- When using components made from different metals or connecting pipes made of different metals insulate the joints to prevent any corrosive reaction taking place which may damage the pipework.)

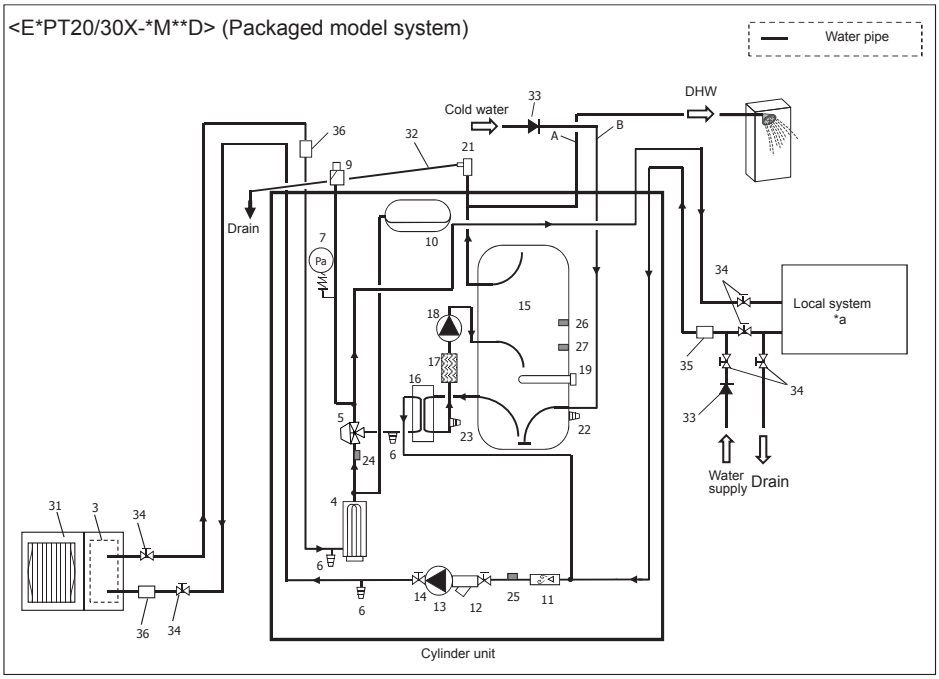

<Figure 3.4>

*a Refer to the following section [Local system].

Note
- To enable draining of the cylinder unit an isolating valve should be positioned on both the inlet and outlet pipework.
- Be sure to install a strainer on the inlet pipework to the cylinder unit.
- Suitable drain pipework should be attached to all relief valves in accordance with your country's regulations.
- A backflow prevention device must be installed on the cold water supply pipework (IEC 61770)
- When using components made from different metals or connecting pipes made of different metals insulate the joints to prevent any corrosive reaction taking place which may damage the pipework.)

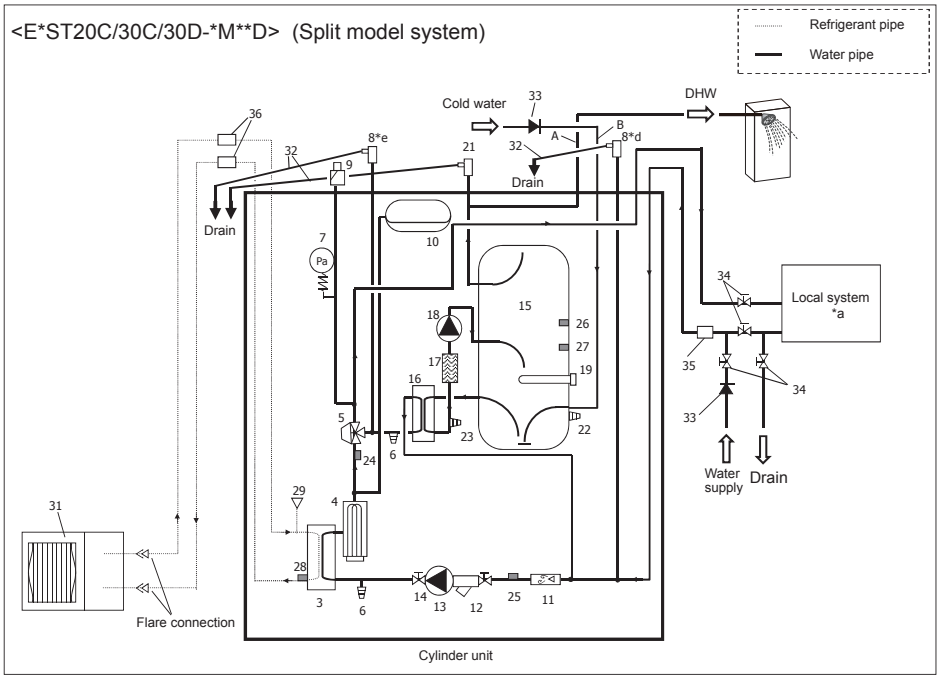

<Figure 3.5>

*a Refer to the following section [Local system].

Note
- To enable draining of the cylinder unit an isolating valve should be positioned on both the inlet and outlet pipework.
- Be sure to install a strainer on the inlet pipework to the cylinder unit.
- Suitable drain pipework should be attached to all relief valves in accordance with your country's regulations.
- A backflow prevention device must be installed on the cold water supply pipework (IEC 61770)
- When using components made from different metals or connecting pipes made of different metals insulate the joints to prevent any corrosive reaction taking place which may damage the pipework.)

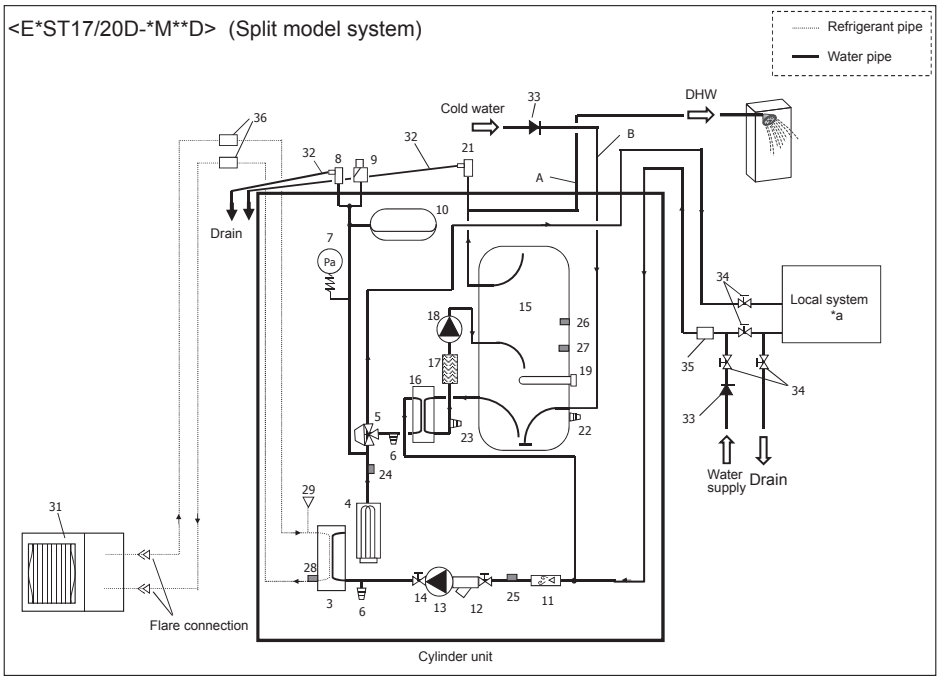

<Figure 3.6>

*a Refer to the following section [Local system].

Note
- To enable draining of the cylinder unit an isolating valve should be positioned on both the inlet and outlet pipework.
- Be sure to install a strainer on the inlet pipework to the cylinder unit.
- Suitable drain pipework should be attached to all relief valves in accordance with your country's regulations.
- A backflow prevention device must be installed on the cold water supply pipework (IEC 61770)
- When using components made from different metals or connecting pipes made of different metals insulate the joints to prevent any corrosive reaction taking place which may damage the pipework.)

en

Local system

1-zone temperature control

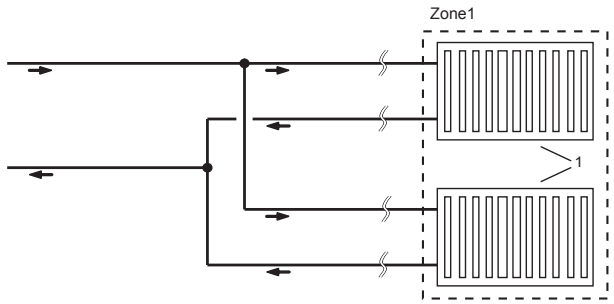

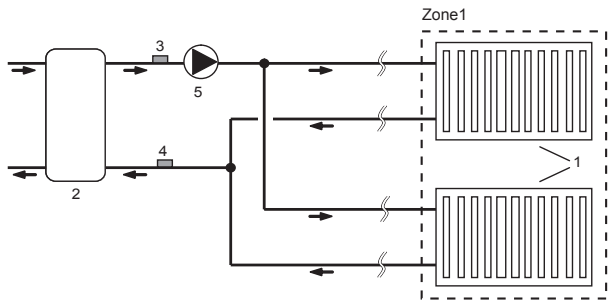

2-zone temperature control

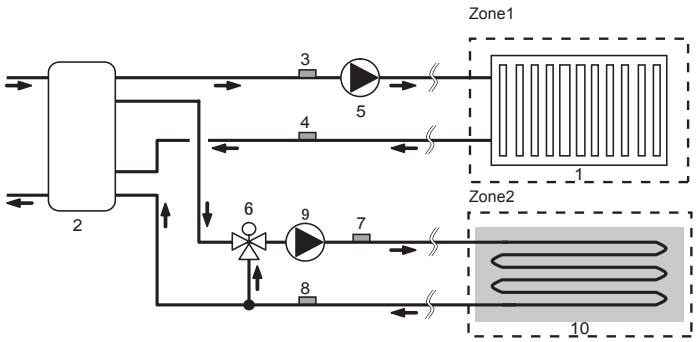

1-zone temperature control with boiler

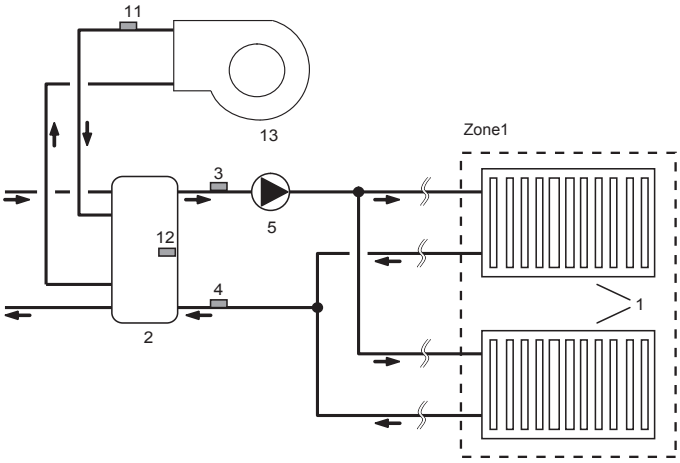

2-zone temperature control with boiler

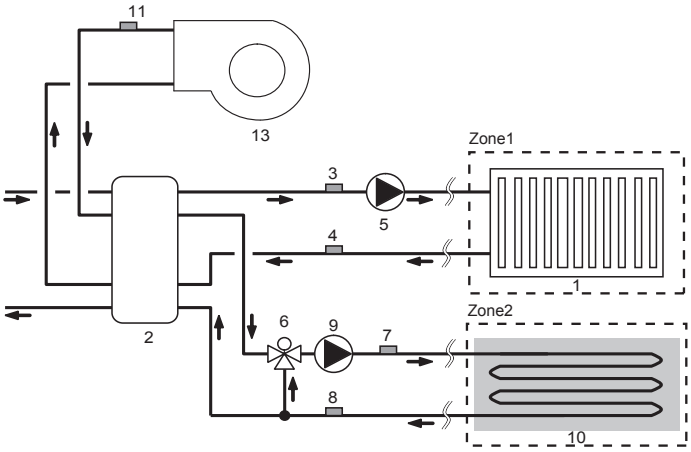

1-zone temperature control (2-zone valve ON/OFF control)

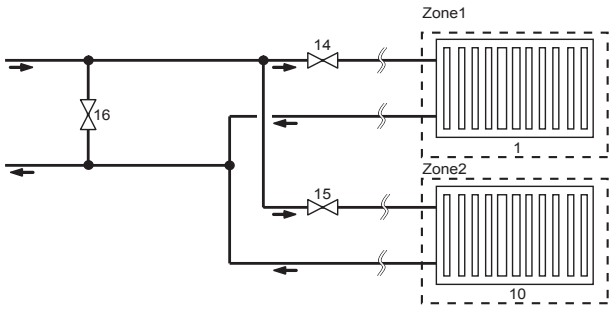

1. Zone1 heat emitters (e.g. radiator, fan coil unit) (local supply)
2. Mixing tank (local supply)
3. Zone1 flow water temp. thermistor (THW6) } Optional part : PAC-TH011-E
4. Zone1 return water temp. thermistor (THW7)
5. Zone1 water circulation pump (local supply)
6. Motorized mixing valve (local supply)
7. Zone2 flow water temp. thermistor (THW8) } Optional part : PAC-TH011-E
8. Zone2 return water temp. thermistor (THW9)
9. Zone2 water circulation pump (local supply)
10. Zone2 heat emitters (e.g. underfloor heating) (local supply)
11. Boiler flow water temp. thermistor (THWB1) } Optional part : PAC-TH012HT-E
12. Mixing tank thermistor (THW10)
13. Boiler (local supply)
14. Zone1 2-way valve (local supply)
15. Zone2 2-way valve (local supply)
16. Bypass valve (local supply)

4 Installation

<Preparation before the installation and service>

- Prepare the proper tools.
- Prepare the proper protection.
- Allow parts to cool before attempting any maintenance.
- Provide adequate ventilation.
- After stopping the operation of the system, turn off the power-supply breaker and remove the power plug.
- Discharge the capacitor before commencing work involving the electric parts.

<Precautions during service>

- Do not perform work involving electric parts with wet hands.
- Do not pour water or liquid into the electric parts.
- Do not touch the refrigerant.
- Do not touch the hot or cold surfaces in the refrigerant cycle.
- When the repair or the inspection of the circuit needs to be carried out without turning off the power, exercise great caution NOT to touch any LIVE parts.

4.1 Location

■ Transportation and Handling

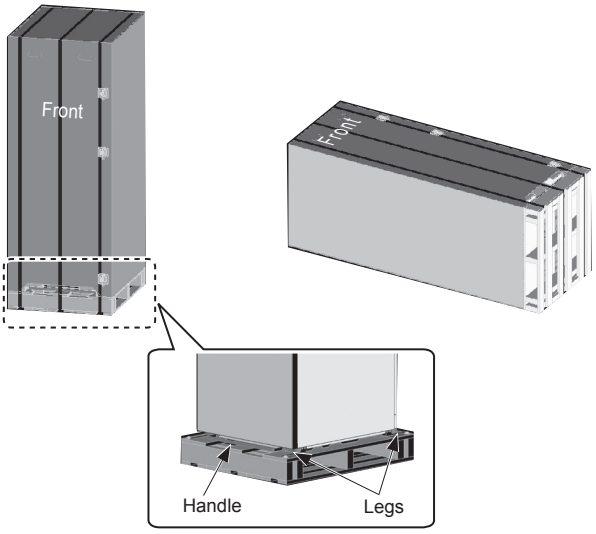

<Figure 4.1.1>

Cylinder unit is delivered on a wooden pallet base with cardboard protection.

Care should be taken when transporting the cylinder unit that the casing is not damaged by impact. Do not remove the protective packaging until cylinder unit has reached its final location. This will help protect the structure and control panel.

- The cylinder unit can be transported either vertically or horizontally. If transported horizontally the panel marked 'Front' must be facing **UPWARDS** <Figure 4.1.1>.
- The cylinder unit should ALWAYS be moved by a minimum of 3 people.
- When carrying the cylinder unit use the handles provided.
- Before using the handles, make sure they are securely attached.
- **Please remove front handle, fixing legs, wooden base and any other packaging once the unit is in installation location.**
- **Keep the handles for future transportation.**

■ Suitable Location

Before installation the cylinder unit should be stored in a frost-free weather-proof location. Units must **NOT** be stacked.

- The cylinder unit should be installed indoors in a frost free weather proof location.
- Install the cylinder unit where it is not exposed to water/excessive moisture.
- The cylinder unit should be positioned on a level surface capable of supporting it's **FILLED** weight. (Adjustable feet (accessory parts) can be used to ensure unit is level)
- When using the adjustable feet, ensure that the floor is strong enough.
- Care should be taken that minimum distances around and in front of the unit for service access are observed <Figure 4.1.2>.
- Secure the cylinder unit to prevent it being knocked over.

■ Service access diagrams

Service access	
Parameter	Dimension (mm)
a	300*
b	150
c (distance behind unit not visible in Figure 4.1.2)	10
d	500

<Table 4.1.1>

Sufficient space MUST be left for the provision of discharge pipework as detailed in National and Local Building Regulations.

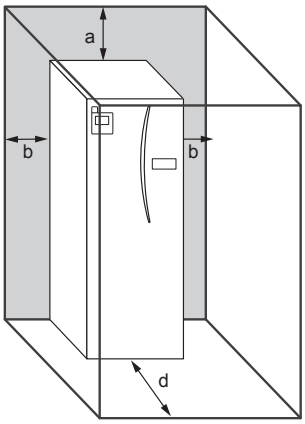

* An additional 300 mm of space (total 600 mm) is required , when installing the optional 2-zone kit (PAC-TZ02-E) on top of the cylinder unit.

<Figure 4.1.2>
Service access

The cylinder unit must be located indoors and in a frost-free environment, for example in a utility room, to minimise heat loss from stored water.

■ Repositioning

If you need to move the cylinder unit to a new position FULLY DRAIN the cylinder unit before moving to avoid damage to the unit.

en

4.2 Water Quality and System Preparation

General

- The water in both primary and sanitary circuit should be clean and with pH value of 6.5-8.0
- The followings are the maximum values;
  Calcium: 100mg/L, Ca hardness: 250mg/L
  Chlorine: 100mg/L, Copper: 0.3mg/L
- Other constituents should be to European Directive 98/83 EC standards.
- In known hard water areas, to prevent/minimise scaling, it is beneficial to restrict the routine stored water temperature (DHW max. temp.) to 55°C.

Anti-Freeze

Anti-freeze solutions should use propylene glycol with a toxicity rating of Class 1 as listed in Clinical Toxicology of Commercial Products, 5th Edition.

Note:

1. Ethylene glycol is toxic and should NOT be used in the primary water circuit in case of any cross-contamination of the potable circuit.

2. For 2-zone valve ON/OFF control, propylene glycol should be used.

New Installation (primary water circuit)

en

- Before connecting outdoor unit, thoroughly cleanse pipework of building debris, solder etc using a suitable chemical cleansing agent.
- Flush the system to remove chemical cleanser.
- For all packaged model systems add a combined inhibitor and anti-freeze solution to prevent damage to the pipework and system components.
- For split model systems the responsible installer should decide if anti-freeze solution is necessary for each site's conditions. Corrosion inhibitor however should ALWAYS be used.

Minimum amount of water required in the space heating/cooling circuit

Outdoor heat pump unit		Minimum water quantity [L]
Packaged model	PUHZ-WM85	
	PUHZ-WM112	
Split model	SUZ-SWM40	
	SUZ-SWM60	
	SUZ-SWM80	
	PUHZ-SW50	
	PUHZ-FRP71	
	PUHZ-SW75	
	PUHZ-SW100	
	PUHZ-SW120	
	PUHZ-SHW80	
	PUHZ-SHW112	
	PUHZ-SHW140	
	PUMY-P112	
	PUMY-P125	
	PUMY-P140	

<Table 4.2.1>

Note:
For 2-zone temperature control system, the value in the table above excludes the amount of stored water in zone2.

Existing Installation (primary water circuit)

- Before connecting outdoor unit the existing heating circuit MUST be chemically cleansed to remove existing debris from the heating circuit.
- Flush the system to remove chemical cleanser.
- For all packaged model systems, and the split model or PUMY system without booster heater, add a combined inhibitor and anti-freeze solution to prevent damage to the pipework and system components.
- For split model systems the responsible installer should decide if anti-freeze solution is necessary for each site's conditions. Corrosion inhibitor however should ALWAYS be used.

When using chemical cleansers and inhibitors always follow manufacturer's instructions and ensure the product is appropriate for the materials used in the water circuit

4.3 Water Pipe Work

Hot Water Pipework

The cylinder unit is UNVENTED. When installing unvented hot water systems building regulations part G3 (England and Wales), P3 (Scotland) and P5 (Northern Ireland) should be adhered to. If outside of the UK please adhere to your own country's regulations for unvented hot water systems.

Connect the flow for the DHW to pipe A (Figure 3.1).
The function of the following safety components of the cylinder unit should be checked on installation for any abnormalities;
- Pressure relief valve (Primary circuit and Tank)
- Expansion vessel pre-charge (gas charge pressure)

The instruction on the following pages regarding safe discharge of hot water from Safety devices should be followed carefully.
- The pipework will become very hot, so should be insulated to prevent burns.
- When connecting pipework, ensure that no foreign objects such as debris or the like enter the pipe.

Cold Water Pipework

Cold water to the suitable standard (see section 4.2) should be introduced to the system by connecting pipe B (Figure 3.1) using appropriate fittings.

Negative pressure prevention

To prevent negative pressure effecting DHW tank, installer should install appropriate pipework or use appropriate devices.

Hydraulic filter work (ONLY E*PT series)

Install a hydraulic filter or strainer (local supply) at the water intake ("Pipe E" in Fig.3.1)

Pipework Connections

Connections to the cylinder unit should be made using the 22 mm or 28 mm compression as appropriate.
When connecting DHW pipes using compression fittings, insert **copper liner for DHW pipe** (accessory parts) into the pipes and tighten them from 0.75 to 1.25 turns.
Do not over-tighten compression fittings as this will lead to deformation of the olive ring and potential leaks.

Note: To weld the pipes in the field, cool the pipes on the cylinder unit using wet towel etc.

Insulation of Pipework

- All exposed water pipework should be insulated to prevent unnecessary heat loss and condensation. To prevent condensate entering the cylinder unit, the pipework and connections at the top of the cylinder unit should be carefully insulated.
- Cold and hot water pipework should not be run close together where possible, to avoid unwanted heat transfer.
- Pipework between outdoor heat pump unit and cylinder unit should be insulated with suitable pipe insulation material with a thermal conductivity of ≤ 0.04 W/m.K.

Drain Pipework (ONLY ER series)

The optional part 'Drain pan stand' does not need to be set because the drain pan is installed.The drain should be set from the drain socket at left rear of the unit.
The drain pipe should be installed to drain condensed water during cooling mode.

- To prevent dirty water from draining directly onto the floor next to cylinder unit, please connect appropriate discharge pipework from the cylinder drain pan.
- Securely install the drain pipe to prevent leakage from the connection.
- Securely insulate the drain pipe to prevent water dripping from the locally supplied drain pipe.
- Install the drain pipe at a down slope of 1/100 or more.
- Do not place the drain pipe in drain channel where sulfuric gas exists.
- After installation, check that the drain pipe drains water properly from the outlet of the pipe to suitable discharge location.

<Installation>

1. The drain socket (inside diameter 26mm) is left rear of the cylinder unit. (Figure 4.3.1)
2. Fix the drain pipe (VP-20) which fits the drain socket with the polyvinyl chloride type adhesive.
3. Set the drain pipework up to the outlet with the down grade of more than one hundredth.

Note: Securely support the locally supplied drain pipe to avoid the drain pipe falling from the drain socket.

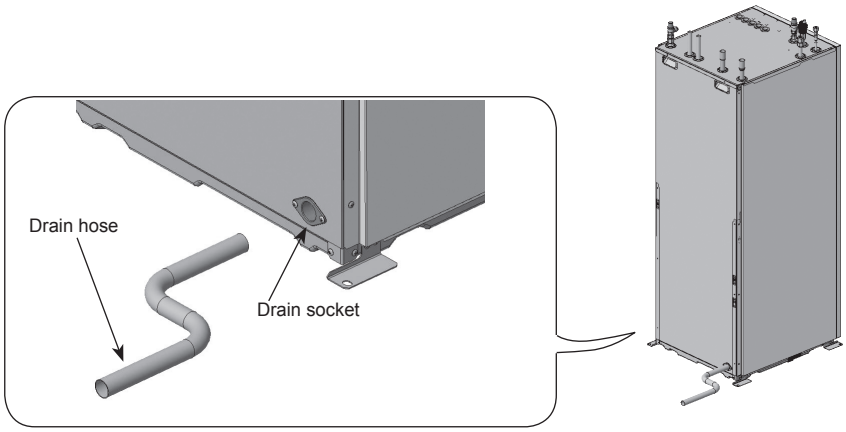

<Figure 4.3.1>

Sizing Expansion Vessels

Expansion vessel volume must fit the local system water volume.
To size an expansion vessel for the heating circuit the following formula and graph can be used.
When the necessary expansion vessel volume exceeds the volume of an built-in expansion vessel, install an additional expansion vessel so that the sum of the volumes of the expansion vessels exceeds the necessary expansion vessel volume.

* For installation of an E*PT**X-*M*ED* model, provide and install an expansion vessel in the field as the model **DOES NOT** come fitted with an expansion vessel.

$$V = \frac{\varepsilon \times G}{1 - \frac{P_1 + 0.098}{P_2 + 0.098}}$$

Where;

V : Necessary expansion vessel volume [L]
ε : Water expansion coefficient
G : Total volume of water in the system [L]
P_1 : Expansion vessel setting pressure [MPa]
P_2 : Max. pressure during operation [MPa]

Graph to the right is for the following values

ε : at 70 °C = 0.0229
P_1 : 0.1 MPa
P_2 : 0.3 MPa
*A 30% safety margin has been added.

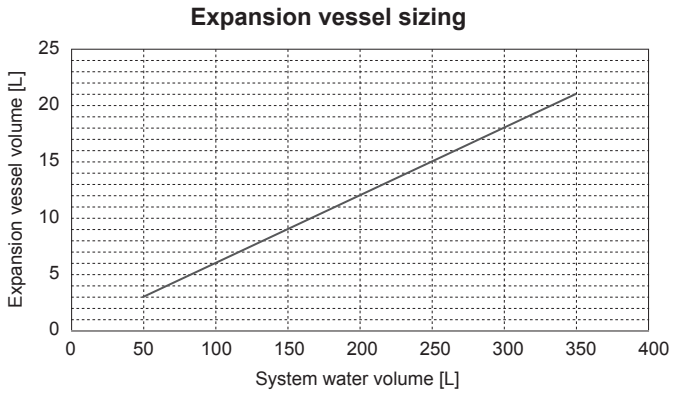

<Figure 4.3.2>

en

Water Circulation Pump Characteristics

1. Primary circuit
Pump speed can be selected by main remote controller setting (see <Figure 4.3.3 to 4.3.7>).
Adjust the pump speed setting so that the flow rate in the primary circuit is appropriate for the outdoor unit installed (see Table 4.3.1). It may be necessary to add an additional pump to the system depending on the length and lift of the primary circuit.
For outdoor unit model not listed in the <Table 4.3.1>, refer to Water flow rate range in the specification table of outdoor unit Data Book. In such case, make sure that the flow rate is greater than 5.0 L/min and less than 36.9 L/min.

<Second pump >
If a second pump is required for the installation please read the following carefully.
If a second pump is used in the system it can be positioned in 2 ways.
The position of the pump influences which terminal of the FTC the signal cable should be wired to. If the additional pump(s) have current greater than 1A please use appropriate relay. Pump signal cable can either be wired to TBO.1 1-2 or CNP1 but NOT both.

Option 1 (Space heating/cooling only)
If the second pump is being used for the heating circuit only then the signal cable should be wired to TBO.1 terminals 3 and 4 (OUT2). In this position the pump can be run at a different speed to the cylinder unit's in-built pump.

Option 2 (Primary circuit DHW and space heating/cooling)
If the second pump is being used in the primary circuit between the cylinder unit and the outdoor unit (Package system ONLY) then the signal cable should be wired to TBO.1 terminals 1 and 2 (OUT1). In this position the pump speed **MUST** match the speed of the cylinder unit's in-built pump.
Note: Refer to 5.2 Connecting inputs/outputs.

Outdoor heat pump unit		Water flow rate range [L/min]
Packaged model	PUHZ-WM85	10.0 - 25.8
	PUHZ-WM112	14.4 - 32.1
Split model	SUZ-SWM40	6.5 - 11.4
	SUZ-SWM60	7.2 - 17.2
	SUZ-SWM80	7.8 - 21.5
	PUHZ-SW50	7.1 - 17.2
	PUHZ-FRP71	11.5 - 22.9
	PUHZ-SW75	10.2 - 22.9
	PUHZ-SW100	14.4 - 32.1
	PUHZ-SW120	20.1 - 36.9
	PUHZ-SHW80	10.2 - 22.9
	PUHZ-SHW112	14.4 - 32.1
	PUHZ-SHW140	17.9 - 36.9
	PUMY-P112	17.9 - 35.8
	PUMY-P125	17.9 - 35.8
	PUMY-P140	17.9 - 35.8

<Table 4.3.1>

* If the water flow rate is less than the minimum flow rate setting of the flow sensor(default 5.0L/min), the flow rate error will be activated.
If the water flow rate exceeds 36.9 L/min, the flow speed will be greater than 2.0 m/s, which could erode the pipes.

2. Sanitary circuit
Default setting: Speed 2
DHW circulation pump MUST be set to speed 2.

Water circulation pump characteristics

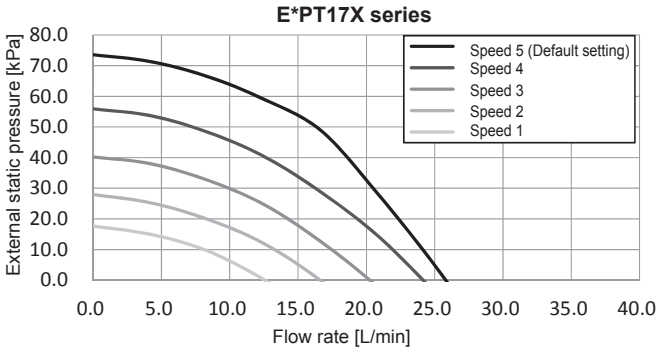

<Figure 4.3.3>

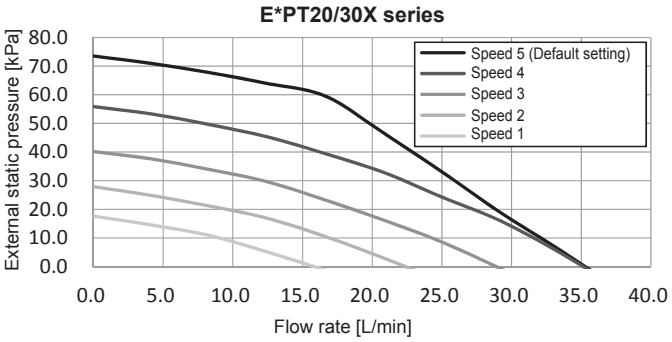

<Figure 4.3.4>

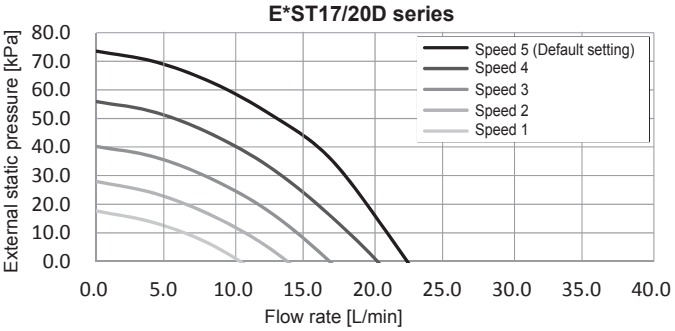

<Figure 4.3.5>

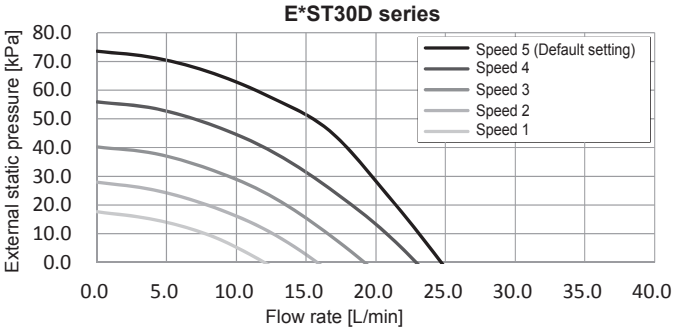

<Figure 4.3.6>

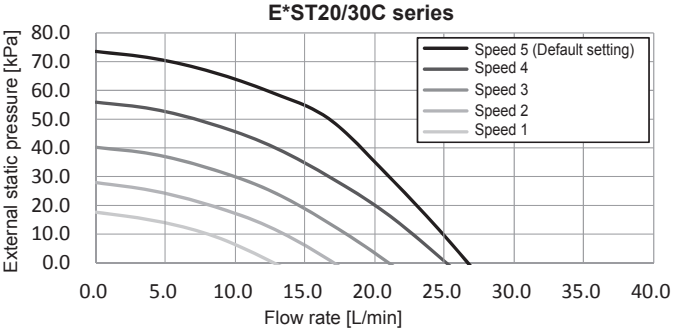

<Figure 4.3.7>

***For installation of E*PT series, set its pump speed with a pressure drop between the cylinder unit and the outdoor unit factored into the external static pressure.**

Immersion heater

When an immersion heater is fitted, do NOT energise the heater until the DHW tank is full of water. Also do NOT energise any immersion heater if any sterilisation chemicals remain in the DHW tank as this will cause premature failure of the heater.

Safety Device Connections

The expansion relief valve on the secondary hot water side, and the temperature and pressure (T&P) relief valve (*A), both need appropriate discharge pipework. There must be no valve fitted between the expansion relief valve and the tank.

*A EHPT**X-MHEDW is equipped with T & P relief valve, and any other models are equipped with Pressure relief valve.

Note : 1. Do not secure the screws excessively when connecting the Discharge pipe, otherwise it may result in damage to the cylinder unit.

<For UK>

The right /left side panel has a plate (*B) so that connection can be made to the factory fitted temperature and pressure relief valve. If you wish to make the connection in a different position you will have to cut a hole in the side panel yourself. However it remains necessary that the drainage parameters outlined in the appropriate Building Regulations are complied with.

*B Unscrew the plate on the right /left-side panel, connect the T&P relief valve to the discharge pipework, and refit the plate. Always replace the plate so that no gaps exist between the plate and side panel to avoid heat loss and run discharge pipe.
In accordance with Building Regulations a tundish must be fitted into the pipework within 500 mm of the safety device (also see Figure 4.4.1). Due to the distance between the two safety devices it may be necessary to fit each safety device with its own tundish before you run the pipework together to a safe discharge (see Figure 4.3.8).

Note : 2. Alternatively the discharges from the expansion relief valve and T&P relief valve may commonly discharge to a singular tundish, so long as this tundish is located within 500 mm of the T&P relief valve in UK. When connecting discharge pipes to the safety devices, beware not to strain the inlet connections.

Diagram part No.	Description	Connection size	Connection type
1	Expansion relief valve (part of inlet control group)	15 mm	Compression
2	Pressure relief valve (primary)	G 1/2	Female
3	T&P relief valve (DHW)	15 mm /G 1/2	Compression/ Female
4	Pressure relief valve (DHW)	G 1/2	Female

<Table 4.3.2>

Always refer to local regulations when installing discharge pipework.
Install discharge pipework in a frost-free environment.
It is necessary to provide appropriate drainage from the pressure relief valve situated on top of the cylinder unit to prevent damage to the unit and the surrounding area from any steam or hot water released. Relief valves MUST NOT be used for any other purpose.

For UK use WK01UK-E kit, for other countries please see below;

- Any discharge pipework should be capable of withstanding discharge of hot water. Discharge pipework should be installed in a continuously downward direction. Discharge pipework must be left open to the environment.

<UK models>
EHPT20X-MHEDW

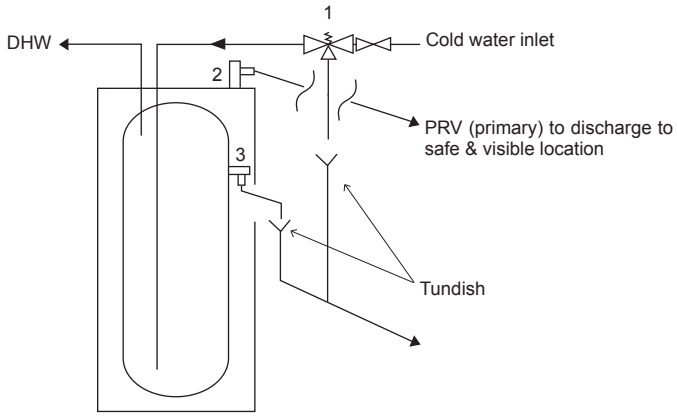

<Other models>

The expansion vessel on the sanitary water side shall be installed as necessary in accordance with your local regulations.

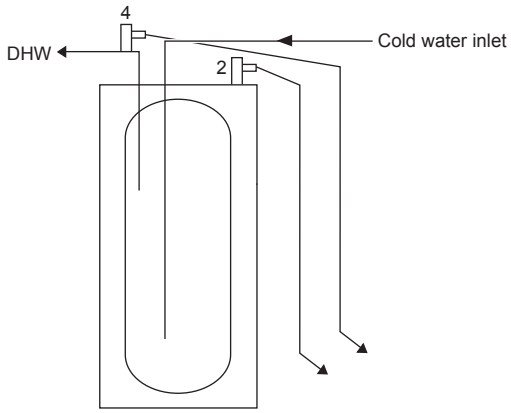

<Figure 4.3.8>

en

4.4 Safety Device Discharge Arrangements (G3)

The following instructions are a requirement of UK Building Regulations and must be adhered to. For other countries please refer to local legislation. If you are in any doubt please seek advice from local building planning office.

1. Position the inlet control group so that discharge from both safety valves can be joined together via a 15 mm end feed Tee.
2. Connect the tundish and route the discharge pipe as shown in Figure 4.4.1.
3. The tundish should be fitted vertically and as close to the safety device as possible and within 500 mm of the device.
4. The tundish should be visible to occupants and positioned away from electrical devices.
5. The discharge pipe (D2) from the tundish should terminate in a safe place where there is no risk to persons in the vicinity of the discharge, be of metal construction and:

A) Be at least one pipe size larger than the nominal outlet size of the safety device unless its total equivalent hydraulic resistance exceeds that of a straight pipe 9 m long i.e. discharge pipes between 9 m and 18 m equivalent resistance length should be at least two sizes larger than the nominal outlet size of the safety device, between 18 and 27 m at least 3 sizes larger, and so on. Bends must be taken into account in calculating the flow resistance. Refer to Figure 4.4.1, Table 4.4.1 and the worked example. An alternative approach for sizing discharge pipes would be to follow BS 6700: 1987 specification for design installation, testing and maintenance of services supplying water for domestic use within buildings and their cartilages.

B) Have a vertical section of pipe at least 300 mm long, below the tundish before any elbows or bends in the pipework.

C) Be installed with a continuous fall.

D) Have discharges visible at both the tundish and the final point of discharge but where this is not possible or is practically difficult there should be clear visibility at one or other of these locations. Examples of acceptable discharge arrangements are:

i. Ideally below a fixed grating and above the water seal in a trapped gully.

ii. Downward discharges at low level; i.e. up to 100 mm above external surfaces such as car parks, hard standings, grassed areas etc. are acceptable providing that where children may play or otherwise come into contact with discharges a wire cage or similar guard is positioned to prevent contact, whilst maintaining visibility.

iii. Discharges at high level; e.g. into a metal hopper and metal down pipe with the end of the discharge pipe clearly visible (tundish visible or not) or onto a roof capable of withstanding high temperature discharges of water and 3 m from any plastic guttering system that would collect such discharges (tundish visible).

iv. Where a single pipe serves a number of discharges, such as in blocks of flats, the number served should be limited to not more than 6 systems so that any installation discharging can be traced reasonably easily. The single common discharge pipe should be at least one pipe size larger than the largest individual discharge pipe (D2) to be connected. If unvented hot water storage systems are installed where discharges from safety devices may not be apparent i.e. in dwellings occupied by blind, infirm or disabled people, consideration should be given to the installation of an electronically operated device to warn when discharge takes place.

Note: The discharge will consist of scalding water and steam. Asphalt, roofing felt and nonmetallic rainwater goods may be damaged by such discharges.

Worked example: The example below is for a G½ temperature relief valve with a discharge pipe (D2) having 4 No. elbows and length of 7 m from the tundish to the point of discharge.

From Table 4.4.1: Maximum resistance allowed for a straight length of 22 mm copper discharge pipe (D2) from a G½ temperature relief valve is: 9.0 m subtract the resistance for 4 No. 22 mm elbows at 0.8 m each = 3.2 m. Therefore the maximum permitted length equates to: 5.8 m. 5.8 m is less than the actual length of 7 m, therefore calculate the next largest size. Maximum resistance allowed for a straight length of 28 mm pipe (D2) from a G½ temperature relief valve equates to: 18 m
Subtract the resistance for 4 No. 28 mm elbows at 1.0 m each = 4 m. Therefore the maximum permitted length equates to: 14 m. As the actual length is 7 m, a 28 mm (D2) copper pipe will be satisfactory.

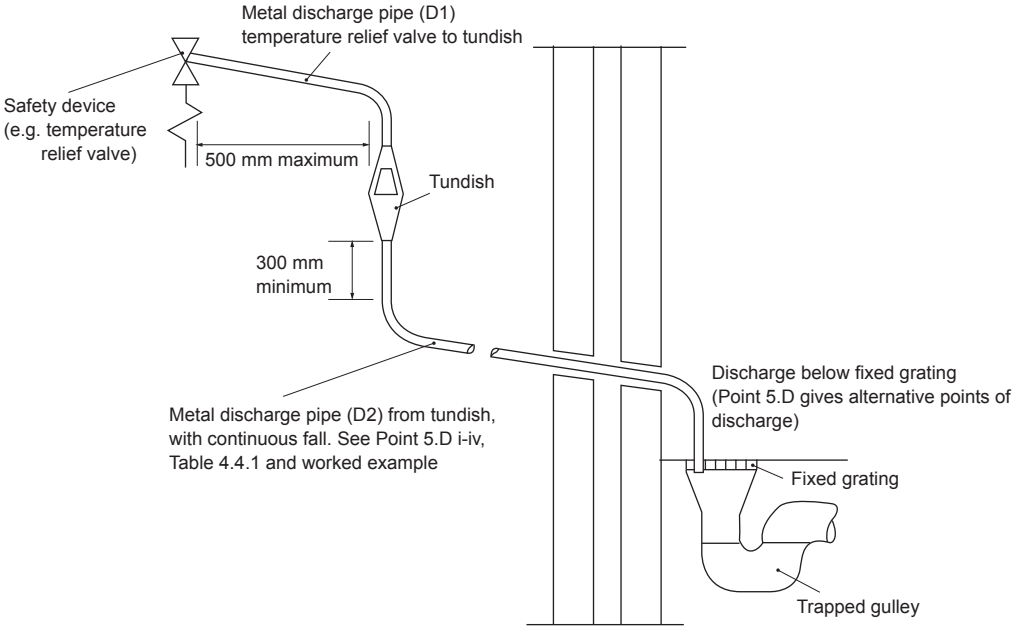

<Figure 4.4.1>

Valve outlet size	Minimum size of discharge pipe D1	Minimum size of discharge pipe D2 from tundish	Maximum resistance allowed, expressed as a length of straight pipe (no elbows or bends)	Resistance created by each elbow or bend
G 1/2	15 mm	22 mm	Up to 9 m	0.8 m
		28 mm	Up to 18 m	1.0 m
		35 mm	Up to 27 m	1.4 m
G 3/4	22 mm	28 mm	Up to 9 m	1.0 m
		35 mm	Up to 18 m	1.4 m
		42 mm	Up to 27 m	1.7 m
G1	28 mm	35 mm	Up to 9 m	1.4 m
		42 mm	Up to 18 m	1.7 m
		54 mm	Up to 27 m	2.3 m

<Table 4.4.1>

4.5 Electrical Connection

All electrical work should be carried out by a suitably qualified technician. Failure to comply with this could lead to electrocution, fire, and death. It will also invalidate product warranty. All wiring should be according to national wiring regulations.

Breaker abbreviation	Meaning
ECB1	Earth leakage circuit breaker for booster heater
ECB2	Earth leakage circuit breaker for immersion heater
TB1	Terminal block 1

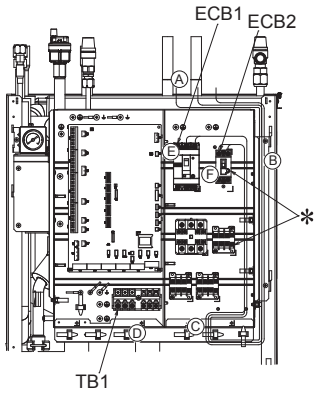

<1 phase (with immersion heater)>

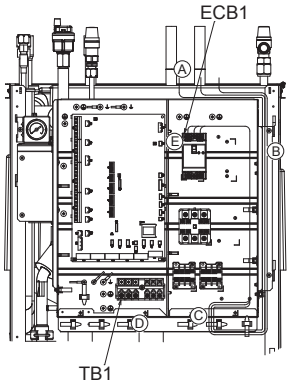

<3 phase (with immersion heater)>

The cylinder unit can be powered in two ways.
1. Power cable is run from the outdoor unit to the cylinder unit.
2. Cylinder unit has independent power source

Connections should be made to the terminals indicated in the figures to the left below depending on the phase.

Booster heater and immersion heater should be connected independently from one another to dedicated power supplies.

Ⓐ Locally supplied wiring should be inserted through the inlets situated on the top of the cylinder unit. (Refer to <Table 3.3>.)
Ⓑ Wiring should be fed down the right hand side of the control and electrical box and clamped in place using clips provided.
Ⓒ The wires should be inserted individually through the cable inlets as below.
② Outputs wire
③ Indoor-Outdoor wire
⑤ Power line(B.H.)/ Power line(I.H.)(Option)
⑦ Signal input wires

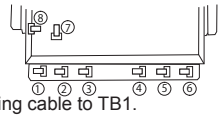

Ⓓ Connect the outdoor unit – cylinder unit connecting cable to TB1.
Ⓔ Connect the power cable for the booster heater to ECB1.
Ⓕ If immersion heater is present, connect the power cable to ECB2.

- Avoid contact between wiring and parts (✻).
- Make sure that ECB1 and ECB2 are ON.
- On completion of wiring ensure main remote controller cable is connected to the relay connector.

en

Cylinder unit powered via outdoor unit

(If you want to use independent source, go to the Mitsubishi website.)

<1 phase>

Affix label A that is included with the manuals near each wiring diagram for cylinder unit and outdoor units.

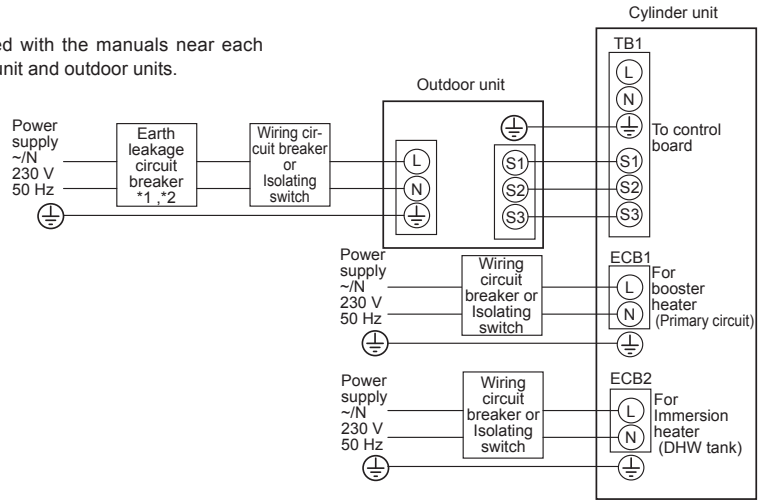

<Figure 4.5.1>
Electrical connections 1 phase

*1 If the installed earth leakage circuit breaker does not have an over-current protection function, install a breaker with that function along the same power line.
*2. A breaker with at least 3.0 mm contact separation in each pole shall be provided. Use earth leakage breaker (NV).
The breaker shall be provided to ensure disconnection of all active phase conductors of the supply.
*3. Max. 45 m
If 2.5 mm² used, Max. 50 m
If 2.5 mm² used and S3 separated, Max. 80 m
*4. The values given in the table above are not always measured against the ground value.

Description	Power supply	Capacity	Breaker	Wiring
Booster heater (Primary circuit)	~/N 230 V 50 Hz	2 kW	16 A *2	2.5 mm²
		6 kW	32 A *2	6.0 mm²
Immersion heater (DHW tank)	~/N 230 V 50 Hz	3 kW	16 A *2	2.5 mm²

Wiring Wiring No. × size (mm²)	Cylinder unit - Outdoor unit	*3	3 × 1.5 (polar)
	Cylinder unit - Outdoor unit earth	*3	1 × Min. 1.5
Circuit rating	Cylinder unit - Outdoor unit S1 - S2	*4	230 V AC
	Cylinder unit - Outdoor unit S2 - S3	*4	24 V DC

Note:
1. **Wiring size must comply with the applicable local and national codes.**
2. **Indoor unit/outdoor unit connecting cords shall not be lighter than polychloroprene sheathed flexible cord. (Design 60245 IEC 57)**
   Indoor unit power supply cords shall not be lighter than polychloroprene sheathed flexible cord. (Design 60227 IEC 53)
3. **Install an earth longer than other cables.**
4. **Please keep enough output capacity of power supply for each heater. Insufficient power supply capacity might cause chattering.**

<3 phase>

Affix label A that is included with the manuals near each wiring diagram for cylinder unit and outdoor units.

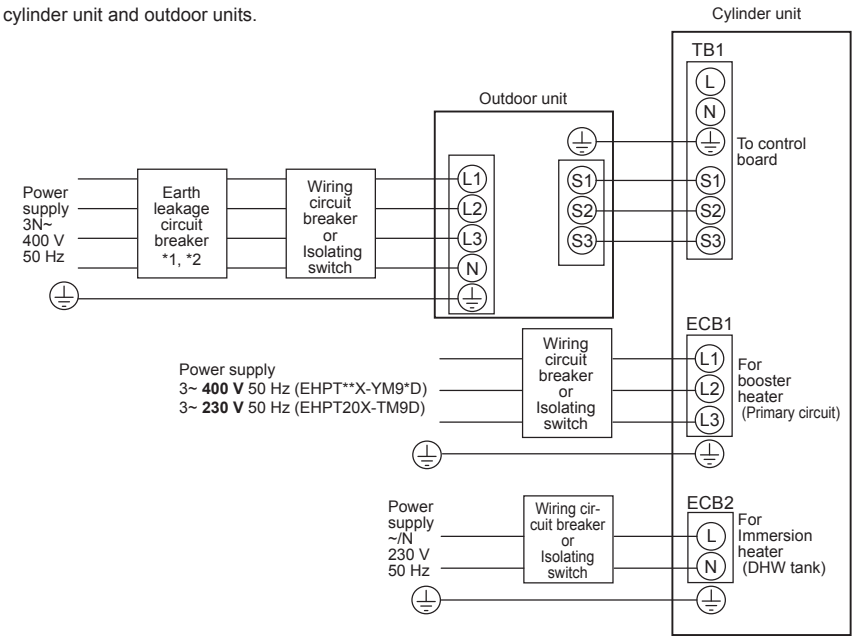

*1 If the installed earth leakage circuit breaker does not have an over-current protection function, install a breaker with that function along the same power line.

<Figure 4.5.2>
Electrical connections 3 phase

Description	Power supply	Capacity (Indoor unit Ref.)	Breaker	Wiring
Booster heater (Primary circuit)	3~ 400 V 50 Hz	9 kW	16 A *2	2.5 mm²
	3~ 230 V 50 Hz	9 kW	32 A *2	6.0 mm²
Immersion heater (DHW tank)	~/N 230 V 50 Hz	3 kW	16 A *2	2.5 mm²

Wiring Wiring No. × size (mm²)	Cylinder unit - Outdoor unit *3	3 × 1.5 (polar)
	Cylinder unit - Outdoor unit earth *3	1 × Min. 1.5
Circuit rating	Cylinder unit - Outdoor unit S1 - S2 *4	230 V AC
	Cylinder unit - Outdoor unit S2 - S3 *4	24 V DC

*2. A breaker with at least 3.0 mm contact separation in each pole shall be provided. Use earth leakage breaker (NV). The breaker shall be provided to ensure disconnection of all active phase conductors of the supply.
*3. Max. 45 m
If 2.5 mm² used, Max. 50 m
If 2.5 mm² used and S3 separated, Max. 80 m
*4. The values given in the table above are not always measured against the ground value.

Note:
1. **Wiring size must comply with the applicable local and national codes.**
2. **Indoor unit/outdoor unit connecting cords shall not be lighter than polychloroprene sheathed flexible cord. (Design 60245 IEC 57) Indoor unit power supply cords shall not be lighter than polychloroprene sheathed flexible cord. (Design 60227 IEC 53)**
3. **Install an earth longer than other cables.**
4. **Please keep enough output capacity of power supply for each heater. Insufficient power supply capacity might cause chattering.**

5 System Set Up

5.1 DIP Switch Functions

The DIP switch number is printed on the circuit board next to the relevant switches. The word ON is printed on the circuit board and on the DIP switch block itself. To move the switch you will need to use a pin or the corner of a thin metal ruler or similar.

DIP switch settings are listed below in Table 5.1.1.
Only an authorised installer can change DIP switch setting under one's own responsibility according to the installation condition.
Make sure to turn off both indoor unit and outdoor unit power supplies before changing the switch settings.

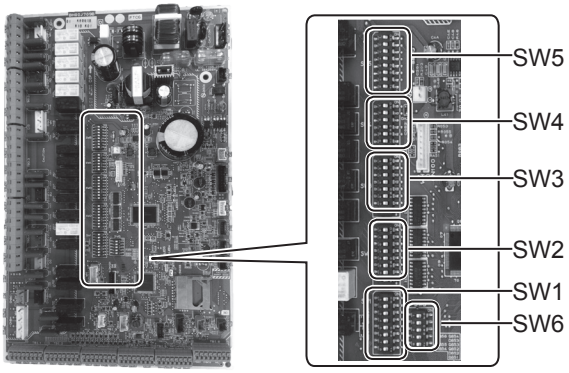

<Figure 5.1.1>

DIP switch		Function	OFF	ON	Default settings: Indoor unit model
SW1	SW1-1	Boiler	WITHOUT Boiler	WITH Boiler	OFF
	SW1-2	Heat pump maximum outlet water temperature	55ºC	60ºC	ON *1
	SW1-3	DHW tank	WITHOUT DHW tank	WITH DHW tank	ON
	SW1-4	Immersion heater	WITHOUT Immersion heater	WITH Immersion heater	OFF: Except EHPT20X-MH-EDW ON : EHPT20X-MHEDW
	SW1-5	Booster heater	WITHOUT Booster heater	WITH Booster heater	OFF: E**T***-M*ED* ON : E**T***-*M 2/6/9*D
	SW1-6	Booster heater function	For heating only	For heating and DHW	OFF: E**T***-M*ED* ON : E**T***-*M 2/6/9*D
	SW1-7	Outdoor unit type	Split type	Packaged type	OFF: E*ST***-*M**D ON : E*PT**X-*M**D*
	SW1-8	Wireless remote controller	WITHOUT Wireless remote controller	WITH Wireless remote controller	OFF
SW2	SW2-1	Room thermostat1 input (IN1) logic change	Zone1 operation stop at thermostat short	Zone1 operation stop at thermostat open	OFF
	SW2-2	Flow switch1 input (IN2) logic change	Failure detection at short	Failure detection at open	OFF
	SW2-3	Booster heater capacity restriction	Inactive	Active	OFF: Except E**T***-VM2*D ON : E**T***-VM2*D
	SW2-4	Cooling mode function	Inactive	Active	OFF: EH*T***-*M**D* ON : ER*T***-*M**D
	SW2-5	Automatic switch to backup heat source operation (When outdoor unit stops by error)	Inactive	Active *2	OFF
	SW2-6	Mixing tank	WITHOUT Mixing tank	WITH Mixing tank	OFF
	SW2-7	2-zone temperature control	Inactive	Active *6	OFF
	SW2-8	Flow sensor	WITHOUT Flow sensor	WITH Flow sensor	ON
SW3	SW3-1	Room thermostat 2 input (IN6) logic change	Zone2 operation stop at thermostat short	Zone2 operation stop at thermostat open	OFF
	SW3-2	Flow switch 2 and 3 input logic change	Failure detection at short	Failure detection at open	OFF
	SW3-3	3-way valve type	AC motor	Stepping motor	OFF: Except E**T17X/17D/20D-*M**D* ON: E**T17X/17D/20D-*M**D
	SW3-4	Electric energy meter	WITHOUT Electric energy meter	WITH Electric energy meter	OFF
	SW3-5	Heating mode function *3	Inactive	Active	ON
	SW3-6	2-zone valve ON/OFF control	Inactive	Active	OFF
	SW3-7	Heat exchanger for DHW	Coil in tank	External plate HEX	ON
	SW3-8	Heat meter	WITHOUT Heat meter	WITH Heat meter	OFF
SW4	SW4-1	—	—	—	OFF
	SW4-2	—	—	—	OFF
	SW4-3	—	—	—	OFF
	SW4-4	Indoor unit only operation (during installation work) *4	Inactive	Active	OFF
	SW4-5	Emergency mode (Heater only operation)	Normal	Emergency mode (Heater only operation)	OFF *5
	SW4-6	Emergency mode (Boiler operation)	Normal	Emergency mode (Boiler operation)	OFF *5
SW5	SW5-1	—	—	—	OFF
	SW5-2	Advanced auto adaptation	Inactive	Active	ON
	SW5-3	Capacity code			
	SW5-4				
	SW5-5				
	SW5-6				
	SW5-7				
	SW5-8	—	—	—	OFF
SW6	SW6-1	—	—	—	OFF
	SW6-2	—	—	—	OFF
	SW6-3	—	—	—	OFF
	SW6-4	Analog output signal (0-10V)	Inactive	Active	OFF
	SW6-5	—	—	—	OFF

	SW5-3	SW5-4	SW5-5	SW5-6	SW5-7
E*ST**C-*M**D	ON	ON	ON	ON	OFF
E*ST**D-*M**D	ON	OFF	OFF	ON	OFF
E*PT**X-*M**D*	OFF	OFF	OFF	OFF	OFF

<Table 5.1.1>

Note:
***1. When the cylinder unit is connected with a PUMY-P/SUHZ-SW outdoor unit of which maximum outlet water temperature is 55ºC, DIP SW1-2 must be changed to OFF.**
***2. External output (OUT11) will be available. For safety reasons, this function is not available for certain errors. (In that case, system operation must be stopped and only the water circulation pump keeps running.)**
***3. This switch functions only when the cylinder unit is connected with a PUHZ-FRP outdoor unit. When another type of outdoor unit is connected, the heating mode function is active regardless of the fact that this switch is ON or OFF.**
***4. Space heating and DHW can be operated only in indoor unit, like an electric boiler. (Refer to "5.4 Indoor unit only operation".)**
***5. If emergency mode is no longer required, return the switch to OFF position.**
***6. Active only when SW3-6 is set to OFF.**

en

5.2 Connecting inputs/outputs

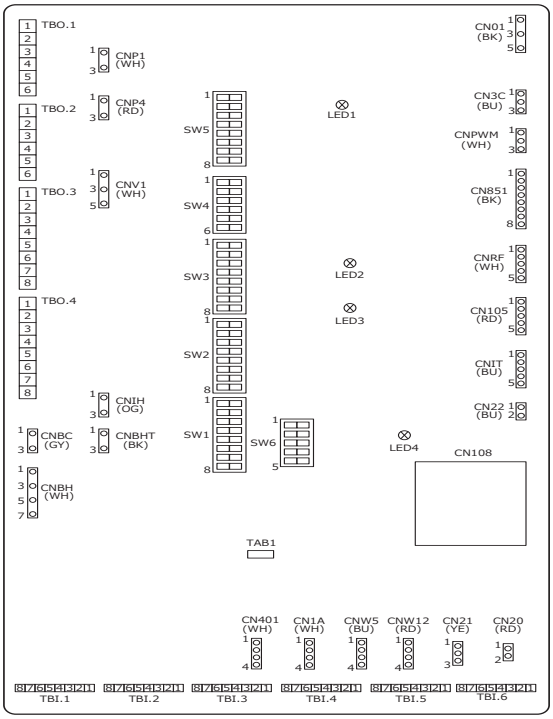

<Figure 5.2.1>

Wiring specification and local supply parts

Item	Name	Model and specifications
Signal input function	Signal input wire	Use sheathed vinyl coated cord or cable. Max. 30 m Wire type: CV, CVS or equivalent Wire size: Stranded wire 0.13 mm² to 0.52 mm² Solid wire: ø0.4 mm to ø0.8 mm
	Switch	Non-voltage “a” contact signals Remote switch: minimum applicable load 12V DC, 1mA

Note:
Stranded wire should be processed with insulation-covered bar terminal (DIN46228-4 standard compatible type).

en

■ Signal inputs

Name	Terminal block	Connector	Item	OFF (Open)	ON (Short)
IN1	TBI.1 7-8	—	Room thermostat 1 input *1	Refer to SW2-1 in <5.1 DIP Switch Functions>.	
IN2	TBI.1 5-6	—	Flow switch 1 input	Refer to SW2-2 in <5.1 DIP Switch Functions>.	
IN3	TBI.1 3-4	—	Flow switch 2 input (Zone1)	Refer to SW3-2 in <5.1 DIP Switch Functions>.	
IN4	TBI.1 1-2	—	Demand control input	Normal	Heat source OFF/ Boiler operation *3
IN5	TBI.2 7-8	—	Outdoor thermostat input *2	Standard operation	Heater operation/ Boiler operation *3
IN6	TBI.2 5-6	—	Room thermostat 2 input *1	Refer to SW3-1 in <5.1 DIP Switch Functions>.	
IN7	TBI.2 3-4	—	Flow switch 3 input (Zone2)	Refer to SW3-2 in <5.1 DIP Switch Functions>.	
IN8	TBI.3 7-8	—	Electric energy meter 1	*4	
IN9	TBI.3 5-6	—	Electric energy meter 2		
IN10	TBI.2 1-2	—	Heat meter		
IN11	TBI.3 3-4	—	Smart grid ready input	*5	
IN12	TBI.3 1-2	—			
INA1	TBI.4 1-3	CN1A	Flow sensor	—	—

*1. Set the ON/OFF cycle time of the room thermostat for 10 minutes or more; otherwise the compressor may be damaged.
*2. If using outdoor thermostat for controlling operation of heaters, the lifetime of the heaters and related parts may be reduced.
*3. To turn on the boiler operation, use the main remote controller to select “Boiler” in “External input setting“ screen in the service menu.
*4. Connectable electric energy meter and heat meter

- Pulse type: Voltage free contact for 12VDC detection by FTC (TBI.2 1pin ,TBI.3 5 and 7 pins have a positive voltage.)
- Pulse duration: Minimum ON time: 40ms
  Minimum OFF time: 100ms
- Possible unit of pulse: 0.1 pulse/kWh, 1 pulse/kWh, 10 pulse/kWh, 100 pulse/kWh, 1000 pulse/kWh

Those values can be set by the main remote controller. (Refer to the menu tree in "Main remote controller".)
*5. As for the SG ready, refer to "5.5 Smart grid ready".

■ Thermistor inputs

Name	Terminal block	Connector	Item	Optional part model
TH1	—	CN20	Thermistor (Room temp.) (Option)	PAC-SE41TS-E
TH2	—	CN21	Thermistor (Ref. liquid temp.)	—
THW1	—	CNW12 1-2	Thermistor (Flow water temp.)	—
THW2	—	CNW12 3-4	Thermistor (Return water temp.)	—
THW5A	—	CNW5 1-2	Thermistor (DHW tank upper water temp.)	—
THW5B	—	CNW5 3-4	Thermistor (DHW tank lower water temp.)	—
THW6	TBI.5 7-8	—	Thermistor (Zone1 flow water temp.) (Option) *1	PAC-TH011-E
THW7	TBI.5 5-6	—	Thermistor (Zone1 return water temp.) (Option) *1	
THW8	TBI.5 3-4	—	Thermistor (Zone2 flow water temp.) (Option) *1	PAC-TH011-E
THW9	TBI.5 1-2	—	Thermistor (Zone2 return water temp.) (Option) *1	
THWB1	TBI.6 7-8	—	Thermistor (Boiler flow water temp.) (Option) *1	PAC-TH012HT-E
THW10	TBI.6 5-6	—	Thermistor (Mixing tank water temp.) (Option) *1	

Ensure to wire thermistor wirings away from the power line and/or OUT1 to 16 wirings.
***1. The maximum length of the thermistor wiring is 30 m.**
The length of the optional thermistors are 5 m. If you need to splice and extend the wirings, following points must be carried out.
1) Connect the wirings by soldering.
2) Insulate each connecting point against dust and water. Stranded wire should be processed with insulation-covered bar terminal (DIN46228-4 standard compatible type).

■ Outputs

Name	Terminal block	Connector	Item	OFF	ON	Signal/Max current	Max. total current
OUT1	TBO.1 1-2	CNP1	Water circulation pump 1 output (Space heating/cooling & DHW)	OFF	ON	230V AC 1.0A Max. (Inrush current 40A Max.)	4.0A (a)
OUT2	TBO.1 3-4	—	Water circulation pump 2 output (Space heating/cooling for Zone1)	OFF	ON	230V AC 1.0A Max. (Inrush current 40A Max.)	
OUT3	TBO.1 5-6	—	Water circulation pump 3 output (Space heating/cooling for Zone2) *1 2-way valve 2b output *2	OFF	ON	230V AC 1.0A Max. (Inrush current 40A Max.)	
OUT14	—	CNP4	Water circulation pump 4 output (DHW)	OFF	ON	230V AC 1.0A Max. (Inrush current 40A Max.)	
OUT4	TBO.2 4-6	CNV1	3-way valve (2-way valve 1) output	Heating	DHW	230V AC 0.1A Max.	3.0A (b)
	—	CN851	3-way valve output				
OUT5	TBO.2 1-2	—	Mixing valve output *1	Stop	Close	230V AC 0.1A Max.	
	TBO.2 2-3				Open		
OUT6	—	CNBH 1-3	Booster heater 1 output	OFF	ON	230V AC 0.5A Max. (Relay)	
OUT7	—	CNBH 5-7	Booster heater 2 output	OFF	ON	230V AC 0.5A Max. (Relay)	
OUT8	TBO.4 7-8	—	Cooling signal output	OFF	ON	230V AC 0.5A Max.	
OUT9	TBO.4 5-6	CNIH	Immersion heater output	OFF	ON	230V AC 0.5A Max. (Relay)	
OUT11	TBO.3 5-6	—	Error output	Normal	Error	230V AC 0.5A Max.	
OUT12	TBO.3 7-8	—	Defrost output	Normal	Defrost	230V AC 0.5A Max.	
OUT13	TBO.4 3-4	—	2-way valve 2a output *2	OFF	ON	230V AC 0.1A Max.	
OUT15	TBO.4 1-2	—	Comp ON signal	OFF	ON	230V AC 0.5A Max.	
OUT10	TBO.3 1-2	—	Boiler output	OFF	ON	non-voltage contact ·220-240V AC (30V DC) 0.5A or less ·10mA 5V DC or more	—
OUT16	TBO.3 3-4	—	Heating/Cooling thermo ON signal	OFF	ON		
OUTA1	TBI.4 7-8	—	Analog output	—	—	0-10V DC 5mA max.	—

Do not connect to the terminals that are indicated as "—" in the "Terminal block" field.
***1 For 2-zone temperature control.**
***2 For 2-zone valve ON/OFF control.**

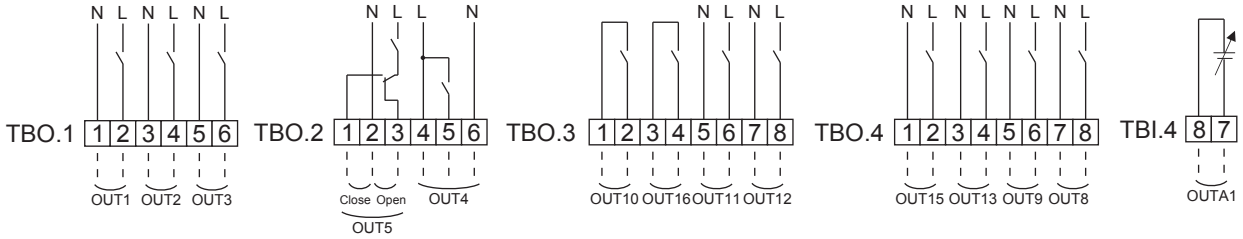

Wiring specification and local supply parts

Item	Name	Model and specifications
External output function	Outputs wire	Use sheathed vinyl coated cord or cable. Max. 30 m Wire type: CV, CVS or equivalent Wire size: Stranded wire 0.25 mm² to 1.5 mm² Solid wire: ø0.57 mm to ø1.2 mm

How to use TBO.1 to 4

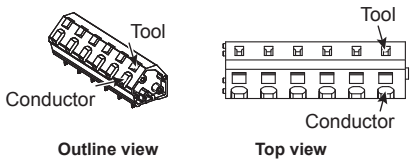

Connect them using either way as shown above.

<Figure 5.2.2>

Note:
1. When the cylinder unit is powered via outdoor unit, the maximum grand total current of (a)+(b) is 3.0 A.
2. Do not connect multiple water circulation pumps directly to each output (OUT1, OUT2, and OUT3). In such a case, connect them via (a) relay(s).
3. Do not connect water circulation pumps to both TBO.1 1-2 and CNP1 at the same time.
4. Connect an appropriate surge absorber to OUT10 (TBO.3 1-2) depending on the load at site.
5. Stranded wire should be processed with insulation-covered bar terminal (DIN46228-4 standard compatible type).
6. Use the same thing as the Signal input wire for OUTA1 wiring.

5.3 Wiring for 2-zone temperature control

Connect the pipe work and locally supplied parts according to the relevant circuit diagram shown "Local system"in Section 3, of this manual.

<Mixing valve>
Connect the signal line to open Port A (hot water inlet port) to TBO. 2-3 (Open), the signal line to open Port B (cold water inlet port) to TBO. 2-1 (Close) , and the neutral terminal wire to TBO. 2-2 (N).

<Thermistor>
・Do not install the thermistors on the mixing tank.
・Install the Zone2 flow temp. thermistor (THW8) near the mixing valve.
・The maximum length of the thermistor wiring is 30 m.
・The length of the optional thermistors are 5 m. If you need to splice and extend the wirings, following points must be carried out.
1) Connect the wirings by soldering.
2) Insulate each connecting point against dust and water.

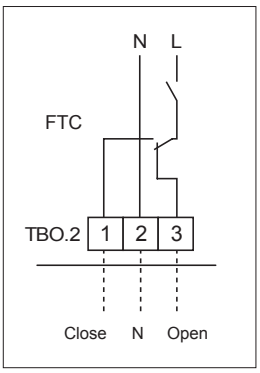

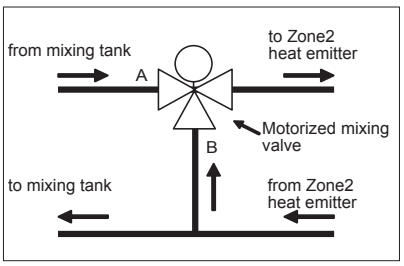

5.4 Indoor unit only operation (during installation work)

In the case when DHW or heating operation is required prior to connection of the outdoor unit; i.e. during installation work, an electric heater in indoor unit (*1) can be used.

*1 Model with electric heater only.

1. To start operation
- Check if the indoor unit power supply is OFF, and turn DIP switch 4-4 and 4-5 ON.
- Turn ON the indoor unit power supply.

2. To end operation*2
- Turn OFF the indoor unit power supply.
- Turn DIP switch 4-4 and 4-5 OFF.

*2 When the indoor unit only operation is ended, ensure to check over the settings after outdoor unit is connected.

Note:

Prolonged running of this operation may affect the life of the electric heater.

5.5 Smart grid ready

In DHW or heating operation, the commands in the table below can be used.

IN11	IN12	Meaning
OFF (open)	OFF (open)	Normal operation
ON (short)	OFF (open)	Switch-on recommendation
OFF (open)	ON (short)	Switch-off command
ON (short)	ON (short)	Switch-on command

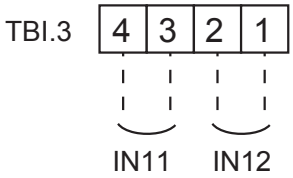

en

5.6 Using SD memory card

The cylinder unit is equipped with an SD memory card interface in FTC.
Using an SD memory card can simplify main remote controller settings and can store operating logs. *1

*1 To edit main remote controller settings or to check operating data, an Ecodan service tool (for use with PC) is required.

<Handling precautions>

(1) Use an SD memory card that complies with the SD standards. Check that the SD memory card has a logo on it of those shown to the right.
(2) SD memory cards to the SD standards include SD, SDHC, miniSD, micro SD, and microSDHC memory cards. The capacities are available up to 32 GB. Choose that with a maximum allowable temperature of 55ºC.
(3) When the SD memory card is a miniSD, miniSDHC, microSD, or micro SDHC memory card, use an SD memory card converter adapter.
(4) Before writing to the SD memory card, release the write-protect switch.

(5) Before inserting or ejecting an SD memory card, make sure to power off the system. If an SD memory card is inserted or ejected with the system powered on, the stored data could be corrupted or the SD memory card be damaged. *An SD memory card is live for a short duration after the system is powered off. Before insertion or ejection wait until the LED lamps on the FTC control board are all off.
(6) The read and write operations have been verified using the following SD memory cards, however, these operations are not always guaranteed as the specifications of these SD memory cards could change.

Manufacturer	Model	Tested in
Verbatim	#44015	Mar. 2012
SanDisk	SDSDB-002G-B35	Oct. 2011
Panasonic	RP-SDP04GE1K	Oct. 2011
Arvato	2GB PS8032 TSB 24nm MLC	Jun. 2012
Arvato	2GB PS8035 TSB A19nm MLC	Jul. 2014
SanDisk	SDSDUN-008G-G46	Oct. 2016
Verbatim	#43961	Oct. 2016
Verbatim	#44018	Oct. 2016

Before using a new SD memory card (including the card that comes with the unit), always check that the SD memory card can be safely read and written to by the FTC controller.
<How to check read and write operations>
a) Check for correct wiring of power supply to the system. For more details, refer to section 4.5.
(Do not power on the system at this point.)
b) Insert an SD memory card.
c) Power on the system.
d) The LED4 lamp lights if the read and write operations are successfully completed. If the LED4 lamp continues blinking or does not light, the SD memory card cannot be read or written to by the FTC controller.

(7) Make sure to follow the instruction and the requirement of the SD memory card's manufacturer.
(8) Format the SD memory card if determined unreadable in step (6). This could make it readable.
Download an SD card formatter from the following site.
SD Association homepage: https://www.sdcard.org/home/
(9) FTC supports FAT file system but not NTFS file system.
(10) Mitsubishi Electric is not liable for any damages, in whole or in part, including failure of writing to an SD memory card, and corruption and loss of the saved data, or the like. Back up saved data as necessary.
(11) Do not touch any electronic parts on the FTC control board when inserting or ejecting an SD memory card, or else the control board could fail.

(a) For insertion, push on the SD memory card until it clicks into place.
(b) For ejection, push on the SD memory card until it clicks.
Note: To avoid cutting fingers, do not touch sharp edges of the SD memory card connector (CN108) on the FTC control board.

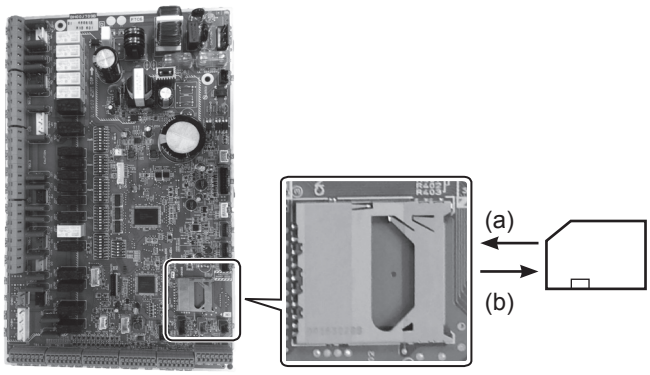

en

Logos
Capacities
2 GB to 32 GB *2
SD speed classes
All

• The SD Logo is a trademark of SD-3C, LLC.
The miniSD logo is a trademark of SD-3C, LLC.
The microSD logo is a trademark of SD-3C, LLC.

*1 To edit main remote controller settings or to check operating data, an Ecodan service tool (for use with PC) is required.
*2 A 2-GB SD memory card stores up to 30 days of operation logs.

5.7 Main remote controller

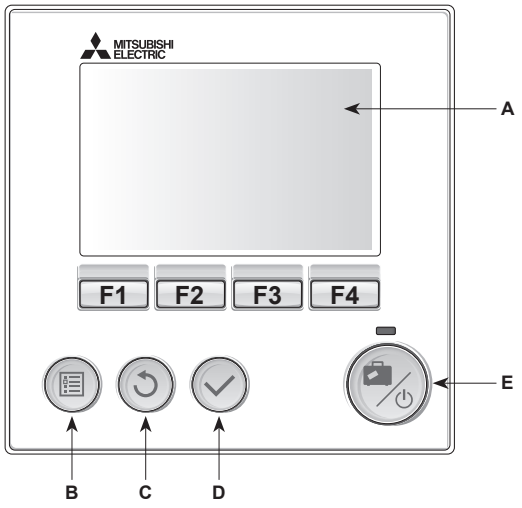

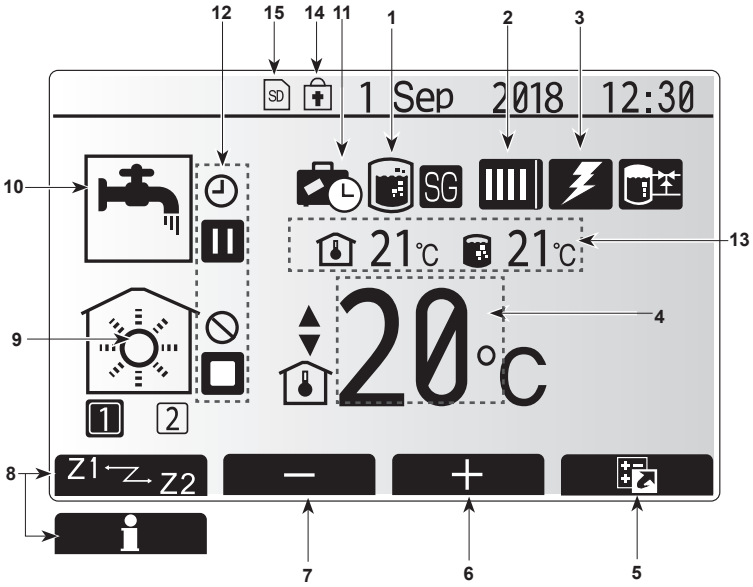

Main screen

<Main remote controller parts>

Letter	Name	Function
A	Screen	Screen in which all information is displayed
B	Menu	Access to system settings for initial set up and modifications.
C	Back	Return to previous menu.
D	Confirm	Used to select or save. (Enter key)
E	Power/Holiday	If system is switched off pressing once will turn system ON. Pressing again when system is switched on will enable Holiday Mode. Holding the button down for 3 seconds will turn the system off. (***1**)
F1-4	Function keys	Used to scroll through menu and adjust settings. Function is determined by the menu screen visible on screen A.

***1**
When the system is switched off or the power supply is disconnected, the cylinder unit protection functions (e.g. freeze stat. function) will NOT operate. Please beware that without these safety functions enabled the cylinder unit may potentially become exposed to damage.

<Main screen icons>

	Icon	Description
1	Legionella prevention	When this icon is displayed 'Legionella prevention mode' is active.
2	Heat pump	'Heat pump' is running.
		Defrosting
		Emergency heating
3	Electric heater	When this icon is displayed the 'Electric heaters' (booster or immersion heater) are in use.
4	Target temperature	Target flow temperature
		Target room temperature
		Compensation curve
5	OPTION	Pressing the function button below this icon will display the option screen.
6	+	Increase desired temperature.
7	-	Decrease desired temperature.
8	Z1 Z2	Pressing the function button below this icon switches between Zone1 and Zone2.
	Information	Pressing the function button below this icon displays the information screen.
9	Space heating/ cooling mode	Heating mode Zone1 or Zone2
		Cooling mode Zone1 or Zone2
10	DHW mode	Normal or ECO mode
11	Holiday mode	When this icon is displayed 'Holiday mode' activated.
12		Timer
		Prohibited
		Server control
		Stand-by
		Stand-by (***2**)
		Stop
		Operating
13	Current temperature	Current room temperature
		Current water temperature of DHW tank
14		The Menu button is locked or the switching of the operation modes between DHW and Heating operations are disabled in the Option screen.(***3**)
15		SD memory card is inserted. Normal operation.
		SD memory card is inserted. Abnormal operation.

***2 This unit is in Stand-by whilst other indoor unit(s) is in operation by priority.**
***3 To lock or unlock the Menu, press the BACK and CONFIRM keys simultaneously for 3 seconds.**

■ Initial setting wizard

When the main remote controller is switched on for the first time, the screen automatically goes to Language setting screen , Date/Time setting screen and Main settings menu screen in order. Enter the desired number using the function keys and press CONFIRM.

Note:
<HEATER CAPACITY RESTRICTION>
This setting restricts the booster heater capacity. It is NOT possible to change the setting after starting up.
If you do not have any special requirements (such as building regulations) in your country, skip this setting (select "No").

■ Main Settings Menu

The main settings menu can be accessed by pressing the MENU button. To reduce the risk of untrained end users altering the settings accidentally there are two access levels to the main settings; and the service section menu is password protected.

User Level – Short press
If the MENU button is pressed once for a short time the main settings will be displayed but without the edit function. This will enable the user to view current settings but **NOT** change the parameters.

Installer Level – Long press
If the MENU button is pressed down for 3 seconds the main settings will be displayed with all functionality available.
The color of ◄► buttons is inverted, as per figure on right. <Fig. 5.7.1>

The following items can be viewed and/or edited (dependent on access level).
- Domestic Hot water (DHW)
- Heating/Cooling
- Schedule timer
- Holiday mode
- Initial settings
- Service (Password protected)

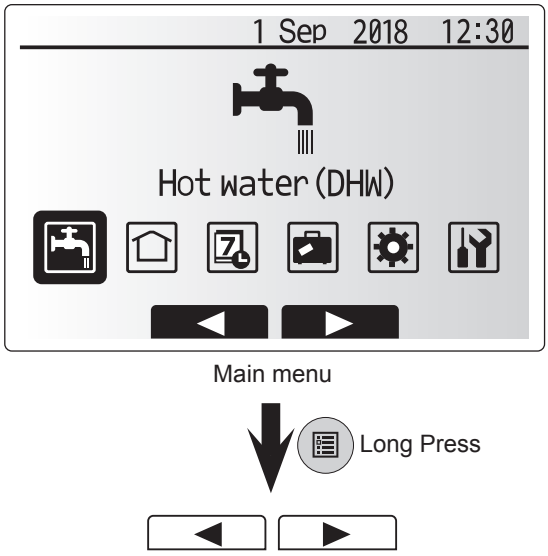

<Fig 5.7.1>

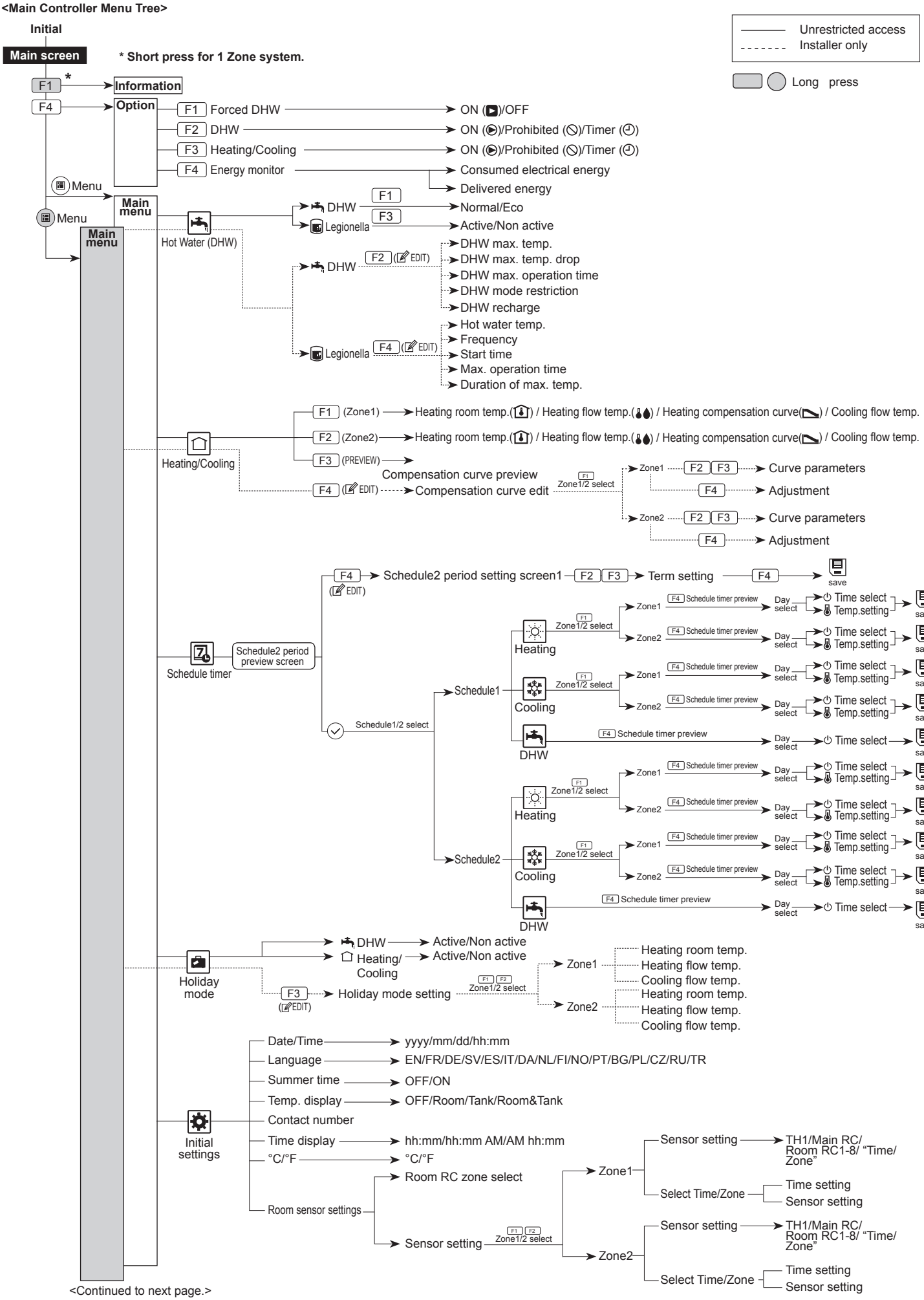
<Main Controller Menu Tree>
Initial
Main screen
* Short press for 1 Zone system.
Unrestricted access
Installer only
Long press
F1 * Information
F4 Option
F1 Forced DHW → ON (▶)/OFF
F2 DHW → ON (▶)/Prohibited (⊘)/Timer (◷)
F3 Heating/Cooling → ON (▶)/Prohibited (⊘)/Timer (◷)
F4 Energy monitor → Consumed electrical energy
Delivered energy
Menu
Main menu
Hot Water (DHW)
DHW F1 → Normal/Eco
Legionella F3 → Active/Non active
DHW F2 (EDIT) → DHW max. temp.
DHW max. temp. drop
DHW max. operation time
DHW mode restriction
DHW recharge
Legionella F4 (EDIT) → Hot water temp.
Frequency
Start time
Max. operation time
Duration of max. temp.
Heating/Cooling
F1 (Zone1) → Heating room temp. / Heating flow temp. / Heating compensation curve / Cooling flow temp.
F2 (Zone2) → Heating room temp. / Heating flow temp. / Heating compensation curve / Cooling flow temp.
F3 (PREVIEW) → Compensation curve preview
F4 (EDIT) → Compensation curve edit
F1 Zone1/2 select
Zone1 F2 F3 → Curve parameters
F4 → Adjustment
Zone2 F2 F3 → Curve parameters
F4 → Adjustment
Schedule timer
Schedule2 period preview screen
F4 (EDIT) → Schedule2 period setting screen1 F2 F3 → Term setting F4 → save
Schedule1/2 select
Schedule1
Heating
Cooling
DHW
Schedule2
Heating
Cooling
DHW
F1 Zone1/2 select
Zone1
Zone2
F4 Schedule timer preview
Day select
Time select
Temp.setting
save
Holiday mode
DHW → Active/Non active
Heating/Cooling → Active/Non active
F3 (EDIT) → Holiday mode setting
F1 F2 Zone1/2 select
Zone1 → Heating room temp. Heating flow temp. Cooling flow temp.
Zone2 → Heating room temp. Heating flow temp. Cooling flow temp.
Initial settings
Date/Time → yyyy/mm/dd/hh:mm
Language → EN/FR/DE/SV/ES/IT/DA/NL/FI/NO/PT/BG/PL/CZ/RU/TR
Summer time → OFF/ON
Temp. display → OFF/Room/Tank/Room&Tank
Contact number
Time display → hh:mm/hh:mm AM/AM hh:mm
°C/°F → °C/°F
Room sensor settings
Room RC zone select
Sensor setting
F1 F2 Zone1/2 select
Zone1
Zone2
Sensor setting → TH1/Main RC/ Room RC1-8/ "Time/ Zone"
Select Time/Zone → Time setting
Sensor setting
<Continued to next page.>

en

<Continued from the previous page.>

<Main Controller Menu Tree>

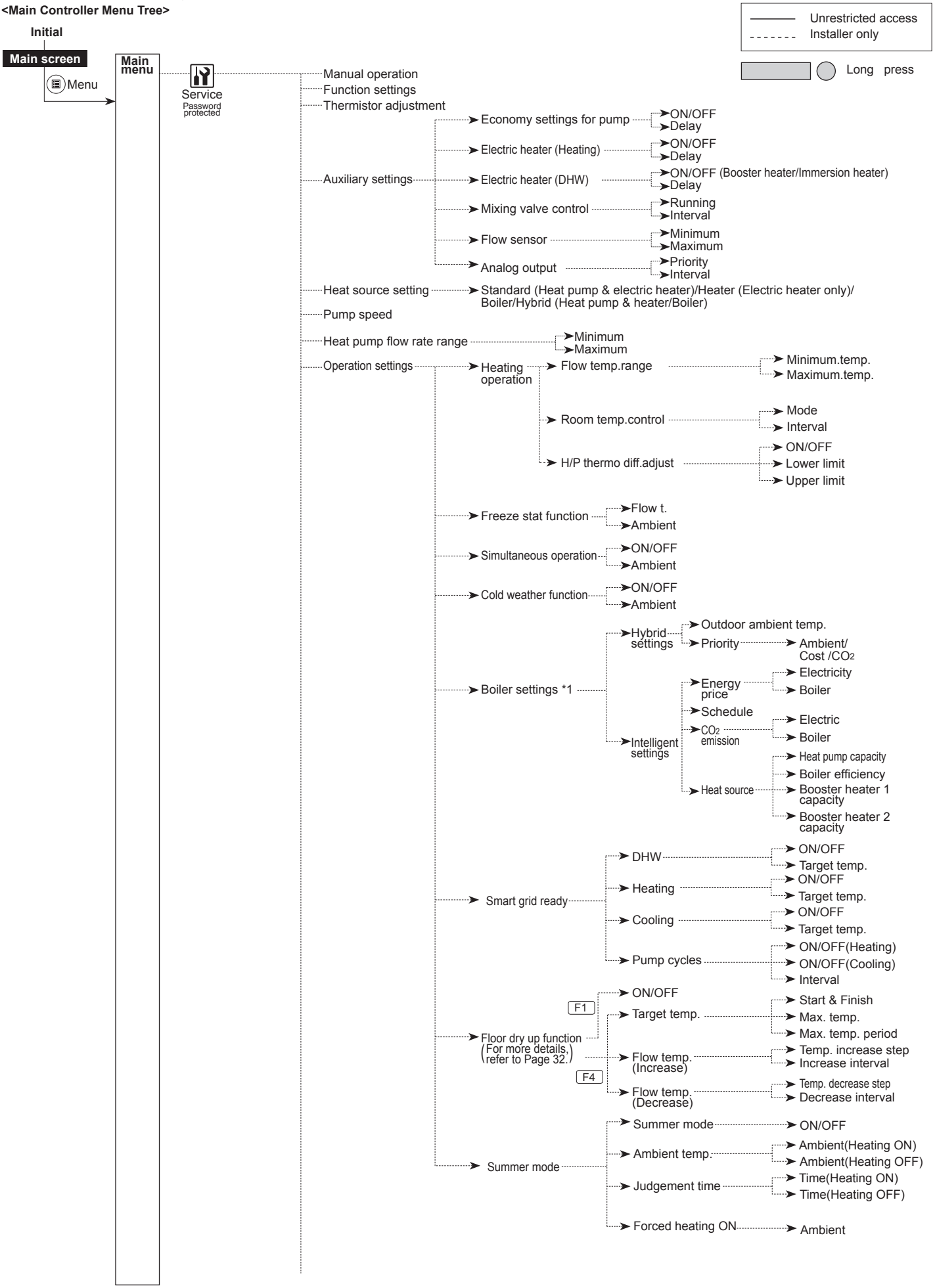

*1 For more details, refer to the installation manual of PAC-TH012HT-E.

en

<Continued from the previous page.>

<Main Controller Menu Tree>

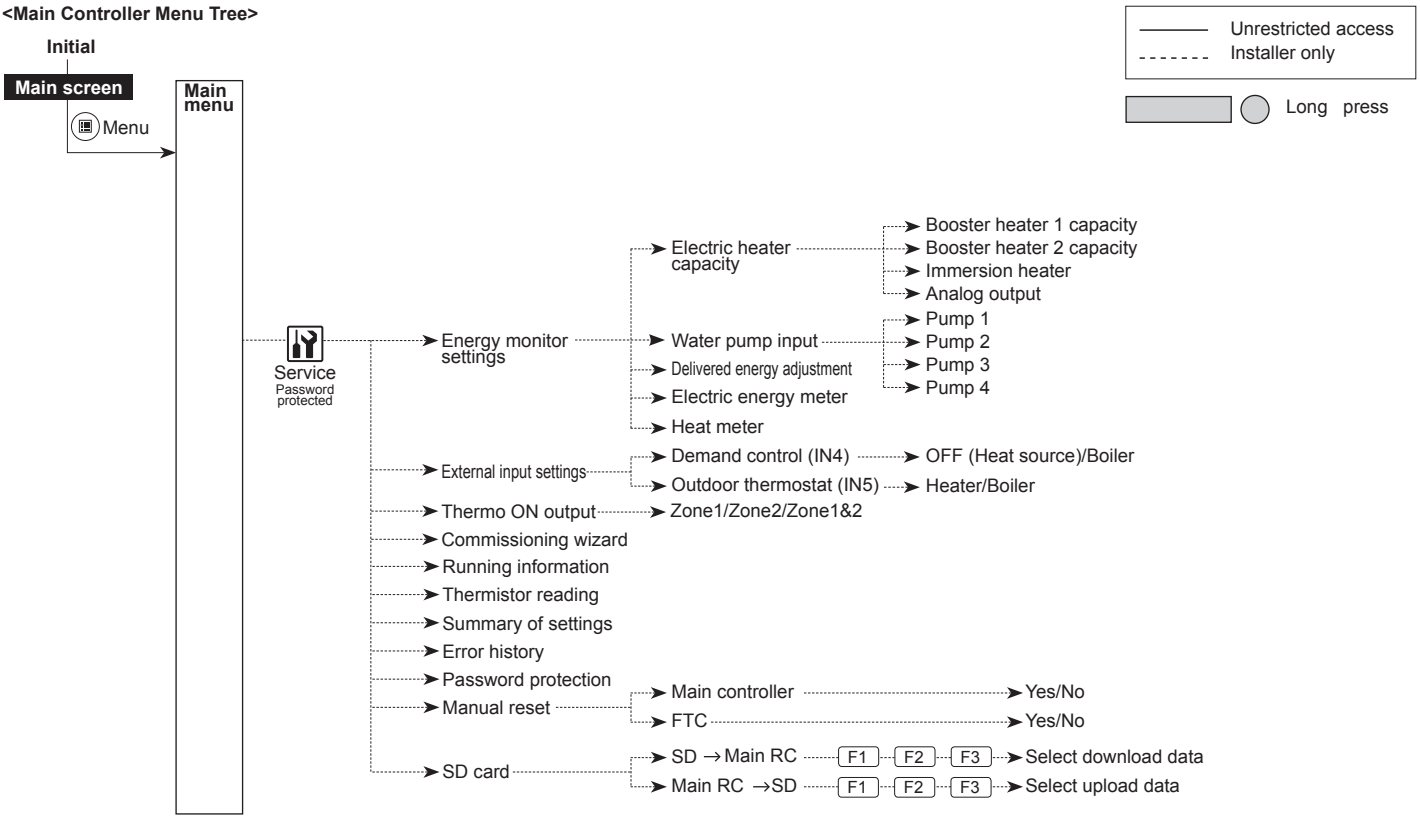

en

Domestic Hot Water (DHW)/Legionella Prevention

The domestic hot water and legionella prevention menus control the operation of DHW tank heat ups.

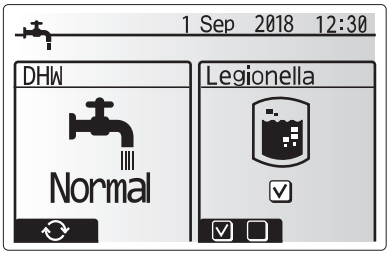

<DHW mode settings>

1. Highlight the hot water icon and press CONFIRM.
2. Use button F1 to switch between Normal and ECO heating modes.
3. To edit the mode, press down the MENU button for 3 seconds, then select “hot water”.
4. Press F2 key to display the HOTWATER (DHW) SETTING menu.
5. Use F2 and F3 keys to scroll through the menu selecting each component in turn by pressing CONFIRM. See the table below for description of each setting.
6. Enter the desired number using the function keys and press CONFIRM.

Menu subtitle	Function	Range	Unit	Default value
DHW max. temp.	Desired temperature of stored hot water	40 - 60	°C	50
DHW max. temp. drop	Difference in temperature between DHW max. temp. and the temperature at which DHW mode restarts	5 - 30	°C	10
DHW max. operation time	Max. time allowed for stored water heating DHW mode	30 - 120	min	60
DHW mode restriction	The time period after DHW mode when space heating has priority over DHW mode temporarily preventing further stored water heating (Only when DHW max. operation time has passed.)	30 - 120	min	30

<Eco mode>

DHW mode can run in either ‘Normal’ or ‘Eco’ mode. Normal mode will heat the water in the DHW tank more quickly using the full power of the heat pump. Eco mode takes a little longer to heat the water in the DHW tank but the energy used is reduced. This is because heat pump operation is restricted using signals from the FTC based on measured DHW tank temperature.

Note: The actual energy saved in Eco mode will vary according to outdoor ambient temperature.

<DHW recharge>

Select the amount of DHW. If you need much hot water, select LARGE.

Return to the DHW/legionella prevention menu.

Legionella Prevention Mode settings (LP mode)

1. Use button F3 to choose legionella mode active YES/NO.
2. To edit the legionella function, press down the MENU button for 3 seconds and select “hot water”, then press F4 key.
3. Use F1 and F2 keys to scroll through the menu selecting each subtitle in turn by pressing CONFIRM. See the table below for description of each setting.
4. Enter the desired number using the function keys and press CONFIRM.

During Legionella Prevention Mode the temperature of the stored water is increased above 60°C to inhibit legionella bacterium growth. It is strongly recommended that this is done at regular intervals. Please check local regulations for the recommended frequency of heat ups.

Please note that LP mode uses the assistance of electric heaters (if present) to supplement the energy input of the heat pump. Heating water for long periods of time is not efficient and will increase running costs. The installer should give careful consideration to the necessity of legionella prevention treatment whilst not wasting energy by heating the stored water for excessive time periods. The end user should understand the importance of this feature. **ALWAYS COMPLY WITH LOCAL AND NATIONAL GUIDANCE FOR YOUR COUNTRY REGARDING LEGIONELLA PREVENTION.**

Note: When failures occur on the hydrobox, the LP mode may not function normally.

Menu subtitle	Function	Range	Unit	Default value
Hot water temp.	Desired temp. of stored hot water	60–70	°C	65
Frequency	Time between LP mode DHW tank heat ups	1–30	day	15
Start time	Time when LP mode will begin	0:00–23:00	-	03:00
Max. operation time	Maximum time allowed for LP mode DHW tank heat	1–5	hour	3
Duration of max. temp.	The time period after LP mode desired water temp. has been reached	1–120	min	30

en

Initial Settings

From the Initial settings menu the installer can set the following.

- Date/Time *Be sure to set it to the local standard time.
- Language
- Summer time
- Temp. display
- Contact number
- Time display
- ºC/ºF
- Room sensor settings

Follow the procedure described in General Operation for the set up operation.

<Room sensor settings>
For room sensor settings it is important to choose the correct room sensor depending on the heating mode the system will operate in.

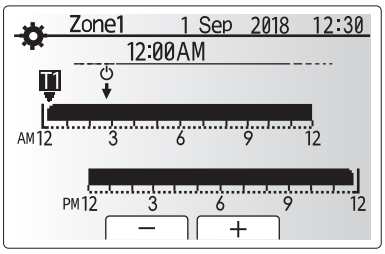

Time/Zone schedule setting screen

Menu subtitle	Description
Room RC zone select	When 2-zone temperature control is active and wireless remote controllers are available, from Room RC zone select screen, select zone no. to assign to each main remote controller.
Sensor setting	From sensor setting screen, select a room sensor to be used for monitoring the room temperature from Zone1 and Zone2 separately.

Control option (pages 26 - 27)	Corresponding initial settings room sensor	
	Zone1	Zone2
A	Room RC 1-8 (one each for Zone1 and Zone2)	*1
B	TH1	*1
C	Main remote controller	*1
D	*1	*1
When different room sensors are used according to the time schedule	Time/ Zone*2	*1

*1. Not specified (if a locally-supplied room thermostat is used) Room RC 1-8 (one each for Zone1 and Zone2) (if a wireless remote controller is used as a room thermostat)
*2. From sensor setting screen, select Time/Zone to make it possible to use different room sensors according to the time schedule set in the Select Time/ Zone menu. The room sensors can be switched up to 4 times within 24 hours.

Service Menu

The service menu provides functions for use by installer or service engineer. It is NOT intended the home owner alters settings within this menu. It is for this reason password protection is required to prevent unauthorised access to the service settings.

The factory default password is "0000".
Follow the procedure described in General Operation for the set up operation.

Many functions can not be set whilst the indoor unit is running. The installer should turn off the unit before trying to set these functions. If the installer attempts to change the settings whilst the unit is running the main remote controller will display a reminder message prompting the installer to stop operation before continuing. By selecting “Yes” the unit will cease operation.

<Manual operation>
During the filling of the system the primary circuit circulation pump and 3-way valve can be manually overridden using manual operation mode.
When manual operation is selected a small timer icon appears in the screen. When selected, this function will only remain in manual operation for a maximum of 2 hours. This is to prevent accidental permanent override of the FTC.

►Example
Pressing F3 button will switch manual operation mode ON for the main 3-way valve. When filling of the DHW tank is complete the installer should access this menu again and press F3 to deactivate manual operation of the part. Alternatively after 2 hours manual operation mode will no longer be active and FTC can resume control of the cylinder unit.

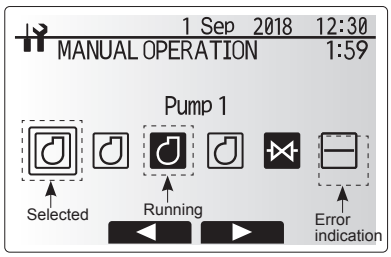

Manual operation menu screen

5 System Set Up

Manual operation and heat source setting can not be selected if the system is running. A screen will be displayed asking the installer to stop the system before these modes can be activated.
The system automatically stops 2 hours after last operation.

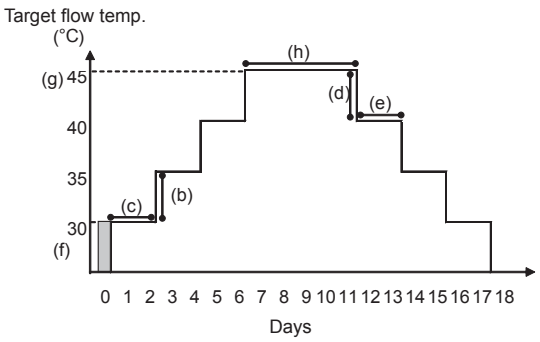

<Floor dry up function>
The Floor dry up function automatically changes the target hot water temperature in stages to gradually dry concrete when this particular type of underfloor heating system is installed.

Upon completion of the operation the system stops all the operations except the Freeze stat. operation.
For Floor dry up function, the target flow temp. of Zone1 is the same as that of Zone2.

- This function is not available when a PUHZ-FRP outdoor unit is connected.
- Disconnect wiring to external inputs of room thermostat, demand control, and outdoor thermostat, or the target flow temperature may not be maintained.

Functions		Symbol	Description	Option/Range	Unit	Default
Floor dry up function		a	Set the function to ON and power on the system using the main remote controller, and the dry up heating operation will start.	On/Off	—	Off
Flow temp. (increase)	Flow temp. increase step	b	Sets the increase step of the target flow temperature.	+1 - +10	ºC	+5
	Increase interval	c	Sets the period for which the same target flow temperature is maintained.	1 - 7	day	2
Flow temp. (decrease)	Flow temp. decrease step	d	Sets the decrease step of the target flow temperature.	−1 - −10	ºC	−5
	Decrease interval	e	Sets the period for which the same target flow temperature is maintained.	1 - 7	day	2
Target temperature	Start & Finish	f	Sets the target flow temperature at the start and the finish of the operation.	20 - 60	ºC	30
	Max. target temp.	g	Sets the maximum target flow temperature.	20 - 60	ºC	45
	Max. temp. period	h	Sets the period for which the maximum target flow temperature is maintained.	1 - 20	day	5

en

<Password protection>
Password protection is available to prevent unauthorised access to the service menu by untrained persons.

Resetting the password
If you forget the password you entered, or have to service a unit somebody else installed, you can reset the password to the factory default of **0000**.

1. From the main settings menu scroll down the functions until Service Menu is highlighted.
2. Press CONFIRM.
3. You will be prompted to enter a password.
4. Hold down buttons F3 and F4 together for 3 seconds
5. You will be asked if you wish to continue and reset the password to default setting.
6. To reset press button F3.
7. The password is now reset to **0000**.

<Manual reset>
Should you wish to restore the factory settings at any time you should use the manual reset function. Please note this will reset ALL functions to the factory default settings.

Password input screen

Password verify screen

6 Commissioning

■ Pre-commissioning exercises- potable/DHW circuit

Initial fill procedure:
Ensure all pipe joints and fittings are tight and secure.
Open the most distant DHW tap/outlet.
Slowly/gradually open the mains water supply to begin filling unit and DHW pipework.
Allow most distant tap to run free and release/purge residual air from installation.
Close tap/outlet to retain fully charged system.
Note: When an immersion heater is fitted, do NOT energise the heater until the DHW tank is full of water. Also do NOT energise any immersion heater if any sterilisation chemicals remain in the DHW tank as this will cause premature failure of the heater.

Initial flush procedure:
Energise system to heat-up cylinder unit contents to a temperature of approx. 30 - 40°C.
Flush/drain the water contents to remove any residue/impurities resulting from the installation works. Use the cylinder unit drain cock to safely discharge the warmed water to drain via a suitable hose.
On completion, close drain cock, re-fill system and resume system commissioning.

■ Error Codes

Code	Error	Action
L3	Circulation water temperature overheat protection	Flow rate may be reduced. Check for; • Water leakage • Strainer blockage • Water circulation pump function (Error code may display during filling of primary circuit, complete filling and reset error code.)
L4	DHW tank water temperature overheat protection	Check the immersion heater and it's contactor.
L5	Indoor unit temperature thermistor (THW1, THW2, THW5A, THW5B, THW6, THW7, THW8, THW9) failure	Check resistance across the thermistor.
L6	Circulation water freeze protection	See Action for L3.
L8	Heating operation error	Check and re-attach any thermistors that may have become dislodged.
L9	Low primary circuit flow rate detected by flow sensor or flow switch (flow switches 1, 2, 3)	See Action for L3. If the flow sensor or flow switch itself does not work, replace it. **Caution: The pump valves may be hot, please take care.**
LC	Boiler circulation water temperature overheat protection	Check if the setting temperature of the Boiler for heating exceeds the restriction. (See the manual of the thermistors "PAC-TH012HT-E")
		Flow rate of the heating circuit from the boiler may be reduced. Check for • water leakage, • strainer blockage • water circulation pump function.
LD	Boiler temperature thermistor (THWB1) failure	Check resistance across the thermistor.
LE	Boiler operation error	See Action for L8. Check the status of the boiler.
LF	Flow sensor failure	Check flow sensor cable for damage or loose connections.
LH	Boiler circulation water freeze protection	Flow rate of the heating circuit from the boiler may be reduced. Check for • water leakage • strainer blockage • water circulation pump function.
LJ	DHW operation error (type of external plate HEX)	• Check for disconnection of DHW tank water lower temp. thermistor (THW5B). • Flow rate of the sanitary circuit may be reduced. • Check for water circulation pump function. (primary / sanitary)
LL	Setting errors of DIP switches on FTC control board	For boiler operation, check that DIP SW1-1 is set to ON (With Boiler) and DIP SW2-6 is set to ON (With Mixing Tank). For 2-zone temperature control, check DIP SW2-7 is set to ON (2-zone) and DIP SW2-6 is set to ON (With Mixing Tank).
LP	Out of water flow rate range for outdoor heat pump unit	Check the installation Table 4.3.1 Check remote controller settings (Service menu / heat pump flow rate range) See Action for L3.
J0	Communication failure between FTC and wireless receiver	Check connection cable for damage or loose connections.
P1	Thermistor (Room temp.) (TH1) failure	Check resistance across the thermistor.
P2	Thermistor (Ref. liquid temp.) (TH2) failure	Check resistance across the thermistor.
P6	Anti-freeze protection of plate heat exchanger	See Action for L3. Check for correct amount of refrigerant.
J1 - J8	Communication failure between wireless receiver and wireless remote controller	Check wireless remote controller's battery is not flat. Check the pairing between wireless receiver to wireless remote controller. Test the wireless communication. (See the manual of wireless system)
E0 - E5	Communication failure between main remote controller and FTC	Check connection cable for damage or loose connections.
E6 - EF	Communication failure between FTC and outdoor unit	Check that the outdoor unit has not been turned off. Check connection cable for damage or loose connections. Refer to outdoor unit service manual.
E9	Outdoor unit receives no signal from indoor unit.	Check both units are switched on. Check connection cable for damage or loose connections. Refer to outdoor unit service manual.
U*, F*	Outdoor unit failure	Refer to outdoor unit service manual.
A*	M-NET communication error	Refer to outdoor unit service manual.

Note: To cancel error codes please switch system off (Press button F4(RESET) on main remote controller).

Annual Maintenance

It is essential that the cylinder unit is serviced at least once a year by a qualified individual. Any required parts should be purchased from Mitsubishi Electric. NEVER bypass safety devices or operate the unit without them being fully operational. For more details, refer to service handbook.

Note
- **Within the first couple of months of installation, remove and clean the cylinder unit's strainer plus any additional filter items that are fitted external to the cylinder unit. This is especially important when installing on an old/existing pipe work system.**
- **The PRV valve and T&P valve (No. 8, 20 and 21 on Figure 3.1) should be checked annually by turning the knob manually so that the medium is discharged, thus cleaning the seal seat.**

In addition to annual servicing it is necessary to replace or inspect some parts after a certain period of system operation. Please see tables below for detailed instructions. Replacement and inspection of parts should always be done by a competent person with relevant training and qualifications.

Parts which require regular replacement

Parts	Replace every	Possible failures
Pressure relief valve (PRV) Manometer Inlet control group (ICG)*	6 years	Water leakage

* OPTIONAL PARTS for UK

Parts which require regular inspection

Parts	Check every	Possible failures
Pressure relief valve (3bar) Temperature and pressure relief valve	1 year (turning the knob manually)	PRV would be fixed and expansion vessel would burst
Immersion heater	2 years	Earth leakage causing circuit breaker to activate (Heater is always OFF)
Water circulation pump (Primary circuit)	20,000 hrs (3 years)	Water circulation pump failure

Parts which must NOT be reused when servicing

* O-ring
* Gasket

Note:
- **Always replace the gasket for pump with a new one at each regular maintenance (every 20,000 hours of use or every 3 years).**
- **No need to inspect pressure relief valve (5 bar) because it does not contact with water unless 3 bar PRV is broken.**

<Draining the cylinder unit and its sanitary heating circuit (local)>
WARNING: DRAINED WATER MAY BE VERY HOT

1. Before attempting to drain the cylinder unit isolate from the electrical supply to prevent the immersion and booster heaters burning out.
2. Isolate cold water feed to DHW tank.
3. Open a hot water tap to allow draining without creating a vacuum.
4. Attach a hose to the DHW tank drain cocks (No. 22 and 23 on Figure 7.1). The hose should be able to withstand heat as the draining water could be very hot. The hose should drain to a place lower than the DHW tank bottom to encourage siphoning. Begin draining by opening drain cock.
5. When the DHW tank is drained close drain cock and hot tap.
6. For primary circuit, attach hose to water circuit drain cocks (No. 6 on Figure 3.1). The hose should be able to withstand heat as the draining water could be very hot. The hose should drain to a place lower than the drain cock to encourage siphoning. Open the pump valves and the strainer valves.
7. Water remains in the strainer still after the cylinder unit was drained.
   Drain the strainer by removing the strainer cover.

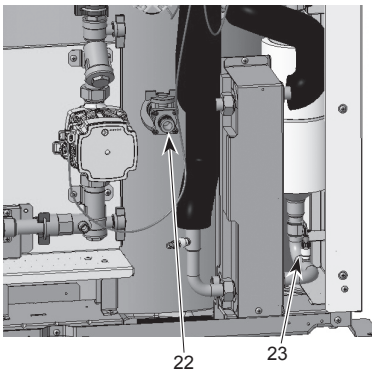

<Figure 7.1>

■ Engineers Forms

Should settings be changed from default, please enter and record new setting in 'Field Setting' column. This will ease resetting in the future should the system use change or the circuit board need to be replaced.

Commissioning/Field settings record sheet

Main remote controller screen					Parameters	Default setting	Field setting	Notes
Main			Zone1 heating room temp.		10°C - 30°C	20°C		
			Zone2 heating room temp. *12		10°C - 30°C	20°C		
			Zone1 heating flow temp.		20°C - 60°C	45°C		
			Zone2 heating flow temp. *1		20°C - 60°C	35°C		
			Zone1 cooling flow temp. *13		5°C - 25°C	15°C		
			Zone2 cooling flow temp. *13		5°C - 25°C	20°C		
			Zone1 heating compensation curve		−9°C - + 9°C	0°C		
			Zone2 heating compensation curve *1		−9°C - + 9°C	0°C		
			Holiday mode		Active/Non active/Set time	—		
Option			Forced DHW operation		On/Off	—		
			DHW		On/Off/Timer	On		
			Heating/Cooling *13		On/Off/Timer	On		
			Energy monitor		Consumed electrical energy/Delivered energy	—		
Setting	DHW		Operation mode		Normal/Eco *15	Normal		
			DHW max. temp.		40°C - 60°C *2	50°C		
			DHW temp. drop		5°C - 30°C	10°C		
			DHW max. operation time		30 - 120 min	60 min		
			DHW mode restriction		30 - 120 min	30 min		
			DHW recharge		Large/Standard	Standard		
	Legionella prevention		Active		Yes/No	Yes		
			Hot water temp.		60°C - 70°C *2	65°C		
			Frequency		1 - 30 days	15 days		
			Start time		00.00 - 23.00	03.00		
			Max. operation time		1 - 5 hours	3 hours		
			Duration of maximum temp.		1 - 120 min	30 min		
	Heating/Cooling *13		Zone1 operation mode		Heating room temp./ Heating flow temp./ Heating compensation curve/ Cooling flow temp.	Room temp.		
			Zone2 operation mode *1		Heating room temp./ Heating flow temp./ Heating compensation curve/ Cooling flow temp.	Compensation curve		
	Compensation curve	Hi flow temp. set point	Zone1 outdoor ambient temp.		−30°C - +33°C *3	−15°C		
			Zone1 flow temp.		20°C - 60°C	50°C		
			Zone2 outdoor ambient temp. *1		−30°C - +33°C *3	−15°C		
			Zone2 flow temp. *1		20°C - 60°C	40°C		
		Lo flow temp. set point	Zone1 outdoor ambient temp.		−28°C - +35°C *4	35°C		
			Zone1 flow temp.		20°C - 60°C	25°C		
			Zone2 outdoor ambient temp. *1		−28°C - +35°C *4	35°C		
			Zone2 flow temp.*1		20°C - 60°C	25°C		
		Adjust	Zone1 outdoor ambient temp.		−29°C - +34°C *5	—		
			Zone1 flow temp.		20°C - 60°C	—		
			Zone2 outdoor ambient temp. *1		−29°C - +34°C *5	—		
			Zone2 flow temp. *1		20°C - 60°C	—		
	Holiday		DHW		Active/Non active	Non active		
			Heating/Cooling *13		Active/Non active	Active		
			Zone1 heating room temp.		10°C - 30°C	15°C		
			Zone2 heating room temp. *12		10°C - 30°C	15°C		
			Zone1 heating flow temp.		20°C - 60°C	35°C		
			Zone2 heating flow temp. *1		20°C - 60°C	25°C		
			Zone1 cooling flow temp. *13		5°C - 25°C	25°C		
			Zone2 cooling flow temp. *13		5°C - 25°C	25°C		
	Initial settings		Language		EN/FR/DE/SV/ES/IT/DA/NL/FI/NO/PT/BG/PL/CZ/RU/TR	EN		
			°C/°F		°C/°F	°C		
			Summer time		On/Off	Off		
			Temp. display		Room/DHW tank/Room&DHW tank /Off	Off		
			Time display		hh:mm/hh:mm AM/AM hh:mm	hh:mm		
			Room sensor settings for Zone1		TH1/Main RC/Room RC1-8/"Time/Zone"	TH1		
			Room sensor settings for Zone2 *1		TH1/Main RC/Room RC1-8/"Time/Zone"	TH1		
			Room RC zone select *1		Zone1/Zone2	Zone1		
	Service menu		Thermistor adjustment	THW1	−10°C - +10°C	0°C		
				THW2	−10°C - +10°C	0°C		
				THW5A	−10°C - +10°C	0°C		
				THW5B	−10°C - +10°C	0°C		
				THW6	−10°C - +10°C	0°C		
				THW7	−10°C - +10°C	0°C		
				THW8	−10°C - +10°C	0°C		
				THW9	−10°C - +10°C	0°C		
				THW10	−10°C - +10°C	0°C		
				THWB1	−10°C - +10°C	0°C		
			Auxiliary settings	Economy settings for pump.	On/Off *6	On		
					Delay (3 - 60 min)	10 min		
				Electric heater (Heating)	Space heating: On (used)/Off (not used)	On		
					Electric heater delay timer (5 - 180 min)	30 min		
				Electric heater (DHW)	Booster heater DHW: On (used)/Off (not used)	On		
					Immersion heater DHW: On (used)/Off (not used)	On		
					Electric heater delay timer (15 - 30 min)	15 min		
				Mixing valve control	Running (10 - 240 sec)	120 sec		
					Interval (1 - 30 min)	2 min		
				Flow sensor *17	Minimum(0 - 100L/min)	5 L/min		
					Maximum(0 - 100L/min)	100 L/min		
				Analog output	Interval (1 - 30 min)	5 min		
					Priority (Normal/High)	Normal		

(Continued to next page.)

■ Engineers Forms

Commissioning/Field settings record sheet (continued from the previous page)

Main remote controller screen						Parameters			Default setting	Field setting	Notes
Setting	Service menu	Pump speed	DHW			Pump speed(1 - 5)			5		
			Heating/Cooling			Pump speed(1 - 5)			5		
		Heat source setting				Standard/Heater/Boiler/Hybrid *7			Standard		
		Heat pump flow rate range				Minimum(0 - 100L/min)			5 L/min		
						Maximum(0 - 100L/min)			100 L/min		
		Operation settings	Heating operation *8	Flow temp.range *10		Minimum.temp.(20 - 45°C)			30°C		
						Maximum.temp.(35 - 60°C)			50°C		
				Room temp.control *14		Mode(Normal/Fast)			Normal		
						Interval(10 - 60min)			10min		
				Heat pump thermo diff.adjust		On/Off *6			On		
						Lower limit(−9 - −1°C)			-5°C		
						Upper limit(+3 - +5°C)			5°C		
			Freeze stat function *11			Outdoor ambient temp. (3 - 20°C) / **			5°C		
			Simultaneous operation (DHW/Heating)			On/Off *6			Off		
						Outdoor ambient temp. (−30 - +10°C) *3			−15°C		
			Cold weather function			On/Off *6			Off		
						Outdoor ambient temp. (−30 - −10°C) *3			−15°C		
			Boiler operation			Hybrid settings	Outdoor ambient temp. (−30 - +10°C) *3		−15°C		
							Priority mode (Ambient/Cost/ CO_2) *16		Ambient		
							Outdoor ambient temp. rise (+1 - +5 °C)		+3 °C		
						Intelligent settings	Energy price *9	Electricity (0.001 - 999 */kWh)	0.5 */kWh		
								Boiler (0.001 - 999 */kWh)	0.5 */kWh		
							CO_2 emission	Electricity (0.001 - 999 kg -CO2/kWh)	0.5 kg -CO2/kWh		
								Boiler (0.001 - 999 kg -CO2/kWh)	0.5 kg -CO2/kWh		
							Heat source	Heat pump capacity (1 - 40 kW)	11.2 kW		
								Boiler efficiency (25 - 150%)	80%		
								Booster heater 1 capacity (0 - 30 kW)	2 kW		
								Booster heater 2 capacity (0 - 30 kW)	4 kW		
			Smart grid ready	DHW		On/Off			Off		
						Target temp(+1- +20°C) / -- (Non active)			--		
				Heating		On/Off			Off		
						Target temp.	Switch-on recommendation(20 - 60°C)		50°C		
							Switch-on command(20 - 60°C)		55°C		
				Cooling		On/Off			Off		
						Target temp.	Switch-on recommendation(5 - 25°C)		15°C		
							Switch-on command(5 - 25°C)		10°C		
				Pump cycles		Heating (On/Off)			On		
						Cooling (On/Off)			On		
						Interval(10-120 min)			10 min		
			Floor dry up function			On/Off *6			Off		
						Target temp.	Start&Finish (20 - 60°C)		30°C		
							Max. temp. (20 - 60°C)		45°C		
							Max. temp. period (1 - 20 days)		5 days		
						Flow temp. (Increase)	Temp. increase step (+1 - +10°C)		+5°C		
							Increase interval (1 - 7 days)		2 days		
						Flow temp. (Decrease)	Temp. decrease step (−1 - −10°C)		−5°C		
							Decrease interval (1 - 7 days)		2 days		
			Summer mode			On/Off			Off		
						Outdoor ambient temp.	Heating ON (4-19°C)		10°C		
							Heating OFF (5-20°C)		15°C		
						Judgement time	Heating ON (1-48 hours)		6 hours		
							Heating OFF (1-48 hours)		6 hours		
						Forced heating ON (-30 - 10°C)			5 °C		

(Continued to next page.)

en

■ Engineers Forms

Commissioning/Field settings record sheet (continued from the previous page)

Main remote controller screen					Parameters	Default setting	Field setting	Notes
	Service menu	Energy monitor settings	Electric heater capacity	Booster heater 1 capacity	0 - 30kW	2kW		
				Booster heater 2 capacity	0 - 30kW	4kW		
				Immersion heater capacity	0 - 30kW	0kW		
				Analog output	0 - 30kW	0kW		
			Delivered energy adjustment		−50 - +50%	0%		
			Water pump input	Pump 1	0 - 200W or ***(factory fitted pump)	***		
				Pump 2	0 - 200W	0W		
				Pump 3	0 - 200W	0W		
				Pump 4	0 - 200W	72W		
			Electric energy meter		0.1/1/10/100/1000 pulse/kWh	1 pulse/kWh		
			Heat meter		0.1/1/10/100/1000 pulse/kWh	1 pulse/kWh		
		External input settings	Demand control (IN4)		Heat source OFF/Boiler operation	Boiler operation		
			Outdoor thermostat (IN5)		Heater operation/Boiler operation	Boiler operation		
		Thermo ON output			Zone1/Zone2/Zone1&2	Zone1&2		

*1 The settings related to Zone2 can be switched only when 2 zone temperature control is enabled (when DIP SW2-6 and SW 2-7 are ON).
*2 For the model without both booster and immersion heater, it may not reach the set temperature depending on the outside ambient temperature.
*3 The lower limit is -15°C depending on the connected outdoor unit.
*4 The lower limit is -13°C depending on the connected outdoor unit.
*5 The lower limit is -14°C depending on the connected outdoor unit.
*6 On: the function is active; Off: the function is inactive.
*7 When DIP SW1-1 is set to OFF “WITHOUT Boiler” or SW2-6 is set to OFF “WITHOUT Mixing tank”, neither Boiler nor Hybrid can be selected.
*8 Valid only when operating in Room temp. control mode.
9 “” of “*/kWh” represents currency unit (e.g. € or £ or the like)
*10 Valid only when operating in Heating room temperature.
*11 If asterisk (**) is chosen freeze stat function is deactivated. (i.e. primary water freeze risk)
*12 The settings related to Zone2 can be switched only when 2-zone temperature control or 2-Zone valve ON/OFF control is active.
*13 Cooling mode settings are available for ER model only.
*14 When DIP SW5-2 is set to OFF, the function is active.
*15 When the cylinder unit is connected with a PUMY-P outdoor unit, the mode is fixed to "Normal".
*16 When the cylinder unit is connected with a PUMY-P outdoor unit, the mode is fixed to "Ambient".
*17 Do not change the setting since it is set according to the specification of flow sensor attached to the cylinder unit.

EC DECLARATION OF CONFORMITY
EG-KONFORMITÄTSERKLÄRUNG
DÉCLARATION DE CONFORMITÉ CE
EG-CONFORMITEITSVERKLARING

DECLARACIÓN DE CONFORMIDAD CE
DICHIARAZIONE DI CONFORMITÀ CE
DECLARAÇÃO DE CONFORMIDADE CE
EU-OVERENSSTEMMELSESERKLÆRING

EG-DEKLARATION OM ÖVERENSSTÄMMELSE
CE-ERKLÆRING OM SAMSVAR
CE-VAATIMUSTENMUKAISUUSVAKUUTUS
ДЕКЛАРАЦИЯ СООТВЕТСТВИЯ НОРМАМ ЕС

ES PROHLÁŠENÍ O SHODĚ
DEKLARACJA ZGODNOŚCI WE
ЕО ДЕКЛАРАЦИЯ ЗА СЪОТВЕТСТВИЕ

MITSUBISHI ELECTRIC AIR CONDITIONING SYSTEMS EUROPE LTD.
NETTLEHILL ROAD, HOUSTOUN INDUSTRIAL ESTATE, LIVINGSTON, EH54 5EQ, SCOTLAND, UNITED KINGDOM

hereby declares under its sole responsibility that the heating system components described below for use in residential, commercial and light-industrial environments:
erklärt hiermit auf seine alleinige Verantwortung, dass die unten beschriebenen Zubehörteile für das Heizungs-System zur Benutzung im häuslichen, kommerziellen und leicht-industriellen Umfeld:
déclare par la présente et sous son entière responsabilité que les composants du système de chauffage décrits ci-dessous pour l'utilisation dans des environnements résidentiels, commerciaux et d'industrie légère :
verklaart hierbij als enige verantwoordelijke dat de componenten van het verwarmingssteem die hieronder worden beschreven, bedoeld zijn voor gebruik in woonomgevingen en in commerciële en licht industriële omgevingen:
declara por la presente bajo su responsabilidad exclusiva que los componentes del sistema de calefacción descritos a continuación para su uso en zonas residenciales, comerciales y para la industria ligera:
con la presente dichiara, sotto la sua esclusiva responsabilità, che i componenti dell'impianto di riscaldamento descritto di seguito, destinato all'uso in ambienti residenziali, commerciali e industriali:
através da presente declara sob sua única responsabilidade que os componentes do sistema de aquecimento abaixo descritos para uso residencial, comercial e de indústria ligeira:
erklærer hermed under eneansvar, at de herunder beskrevne komponenter til opvarmning til brug i privat boligbyggeri, erhvervsområder og inden for let industri:
intygar härmed att uppvärmningssystemkomponenterna som beskrivs nedan är för användning i bostäder, kommersiella miljöer och lätt industri:
erklærer hermed som sitt ansvar, ene og alene, at komponentene i varmesystemet som beskrives nedenfor og som er beregnet for bruk i bolig-, forretnings- og lettindustrimiljøer:
vakuuttaa täten asiasta yksin vastuussa, että alla kuvatut lämmitysjärjestelmän osat, jotka on tarkoitettu käytettäviksi asuin-, toimisto- ja kevyen teollisuuden ympäristöissä:
настоящим заявляет и берет на себя исключительную ответственность за то, что кондиционеры и тепловые насосы, описанные ниже и предназначенные для эксплуатации в жилых помещениях, торговых залах и на предприятиях легкой промышленности:
tímto na vlastní odpovědnost prohlašuje, že níže popsané klimatizační jednotky a tepelná čerpadla pro použití v obytných prostředích, komerčních prostředích a prostředích lehkého průmyslu:
niniejszym oświadcza na swoją wyłączną odpowiedzialność, że klimatyzatory i pompy ciepła opisane poniżej, są przeznaczone do zastosowań w środowisku mieszkalnym, handlowym i lekko uprzemysłowionym:
с настоящото декларира на своя отговорност, че описаните по-долу компоненти за отоплителна система са годни за експлоатация в жилищна, търговска и лекопромишлена среда:

MITSUBISHI ELECTRIC, EHST17D-VM2D, ERST17D-VM2D, EHST20D-MED, EHST20D-VM2D, EHST20D-VM6D, EHST20D-YM9D, EHST20D-YM9ED, EHST20D-TM9D, ERST20D-VM2D, EHST30D-MED
EHST30D-VM6ED, EHST30D-YM9ED, EHST30D-TM9ED, ERST30D-VM2ED, EHST20C-MED, EHST20C-VM2D, EHST20C-VM6D, EHST20C-YM9D, EHST20C-YM9ED, EHST20C-TM9D, ERST20C-VM2D, EHST30C-MED, EHST30C-VM6ED, EHST30C-YM9ED, EHST30C-TM9ED, ERST30C-VM2ED, EHPT17X-VM2D, EHPT17X-VM6D, EHPT17X-YM9D, ERPT17X-VM2D, EHPT20X-MED, EHPT20X-VM6D, EHPT20X-YM9D, EHPT20X-YM9ED, EHPT20X-TM9D, EHPT20X-MHEDW, ERPT20X-MD, ERPT20X-VM2D, ERPT20X-VM6D, EHPT30X-MED, EHPT30X-YM9ED, ERPT30X-VM2ED

Note: Its serial number is on the nameplate of the product.
Hinweis: Die Seriennummer befindet sich auf dem Kennschild des Produkts.
Remarque : Le numéro de série de l'appareil se trouve sur la plaque du produit.
Opmerking: het serienummer staat op het naamplaatje van het product.
Nota: El número de serie se encuentra en la placa que contiene el nombre del producto.
Nota: il numero di serie si trova sulla targhetta del prodotto.
Nota: o número de série encontra-se na placa que contém o nome do produto.
Bemærk: Serienummeret står på produktets fabriksskilt.

Obs: Serienumret finns på produktens namnplåt.
Merk: Serienummeret befinner seg på navneplaten til produktet.
Huomautus: Sen sarjanumero on tuotteen nimikilvessä.
Примечание: серийный номер указан на паспортное табличке изделия.
Poznámka: Příslušné sériové číslo se nachází na štítku produktu.
Uwaga: Numer seryjny znajduje się na tabliczce znamionowej produktu.
Забележка: Серийният номер се намира на табелката с данни за продукта

Directives
Richtlinien
Directives
Richtlijnen
Directivas
Direttive
Directivas
Direktiver

Direktiv
Direktiver
Direktiivit
Директивы
Směrnice
Dyrektywy
Директиви

2014/35/EU: Low Voltage
2006/42/EC: Machinery
2014/30/EU: Electromagnetic Compatibility
2009/125/EC: Energy-related Products
2011/65/EU: RoHS

Issued	**1 Sep. 2019**	**Takashi TANABE**
UNITED KINGDOM		**Manager, Quality Assurance Department**

Please be sure to put the contact address/telephone number on this manual before handing it to the customer.

MITSUBISHI ELECTRIC CORPORATION

HEAD OFFICE: TOKYO BUILDING, 2-7-3, MARUNOUCHI, CHIYODA-KU, TOKYO 100-8310, JAPAN

RG79F364L01

Printed in the UNITED KINGDOM