Encapsulator 1200x900

SKU: ET-ENC

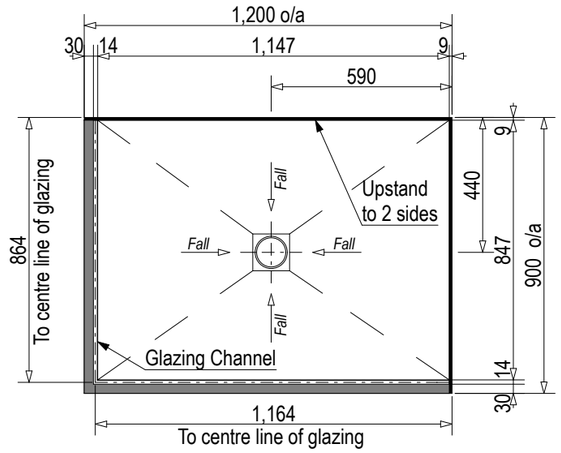

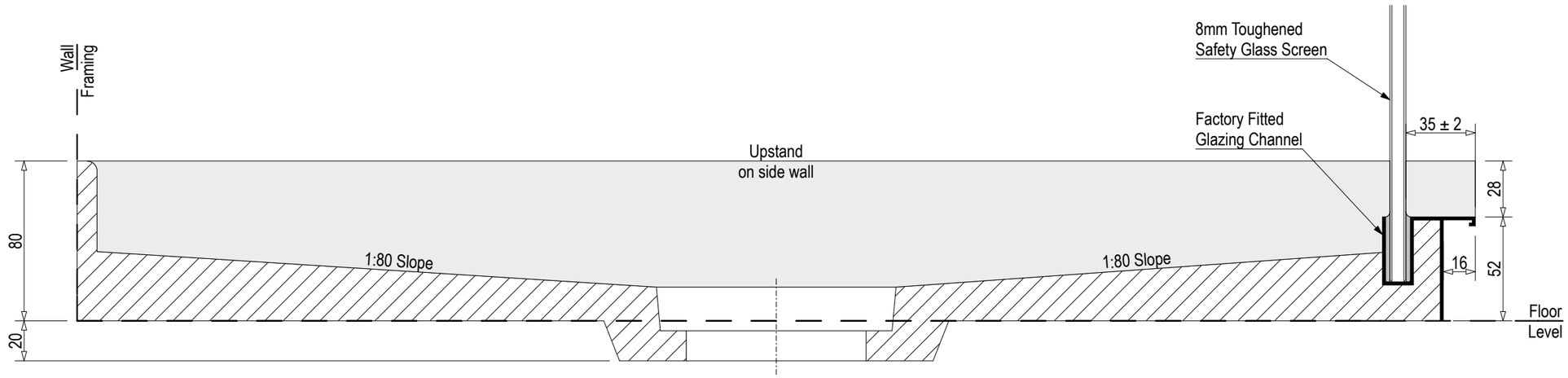

Note: Verify exact shower base dimensions on site

Screen Options:

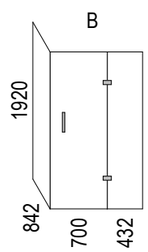

For more product information go to:
www.atlantis.co.nz/shop/easytile/encapsulator-1200x900/

For installation instructions go to:
www.atlantis.co.nz/trade/installation/

EASYTILE

atlantis

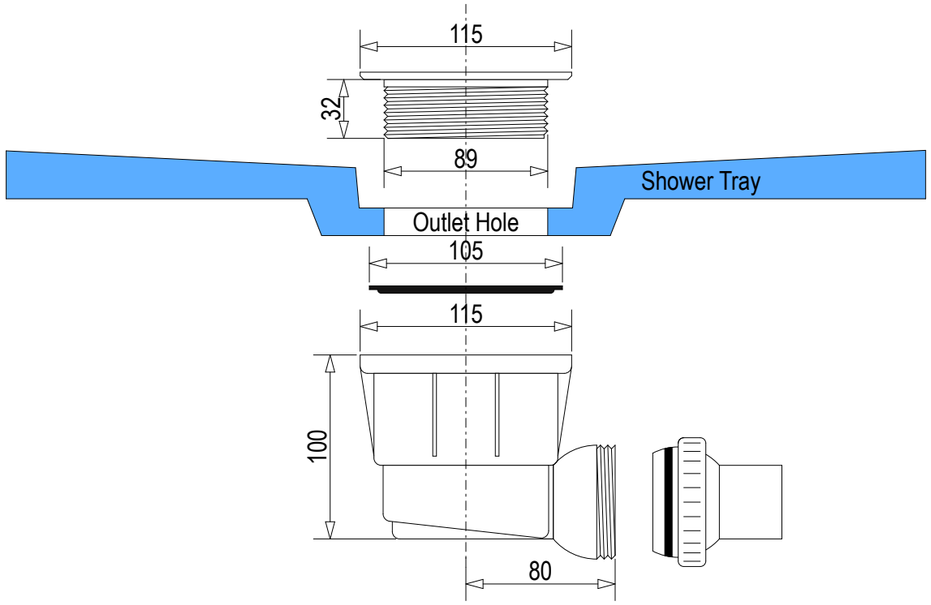
115
32
89
Shower Tray
Outlet Hole
105
115
100
80

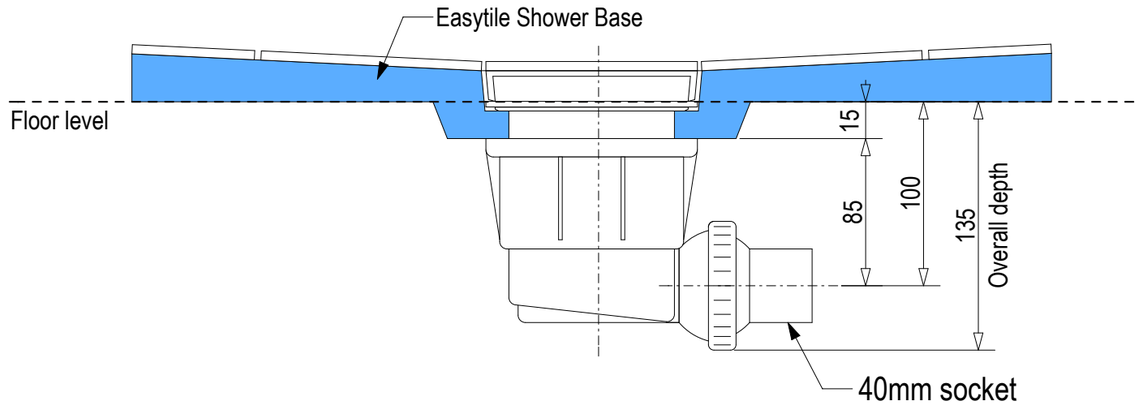
Easytile Shower Base
Floor level
15
85
100
135
Overall depth
40mm socket

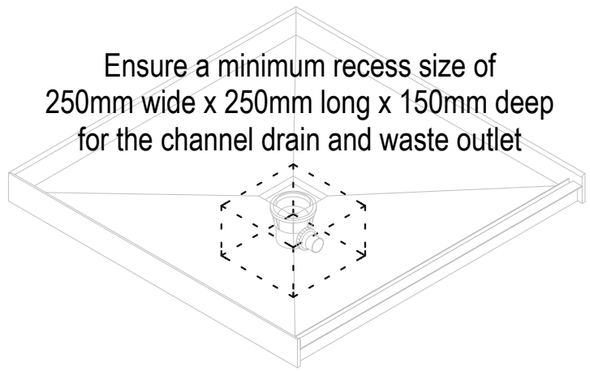
Ensure a minimum recess size of
250mm wide x 250mm long x 150mm deep
for the channel drain and waste outlet

Base Profile 2 - Timber Floor

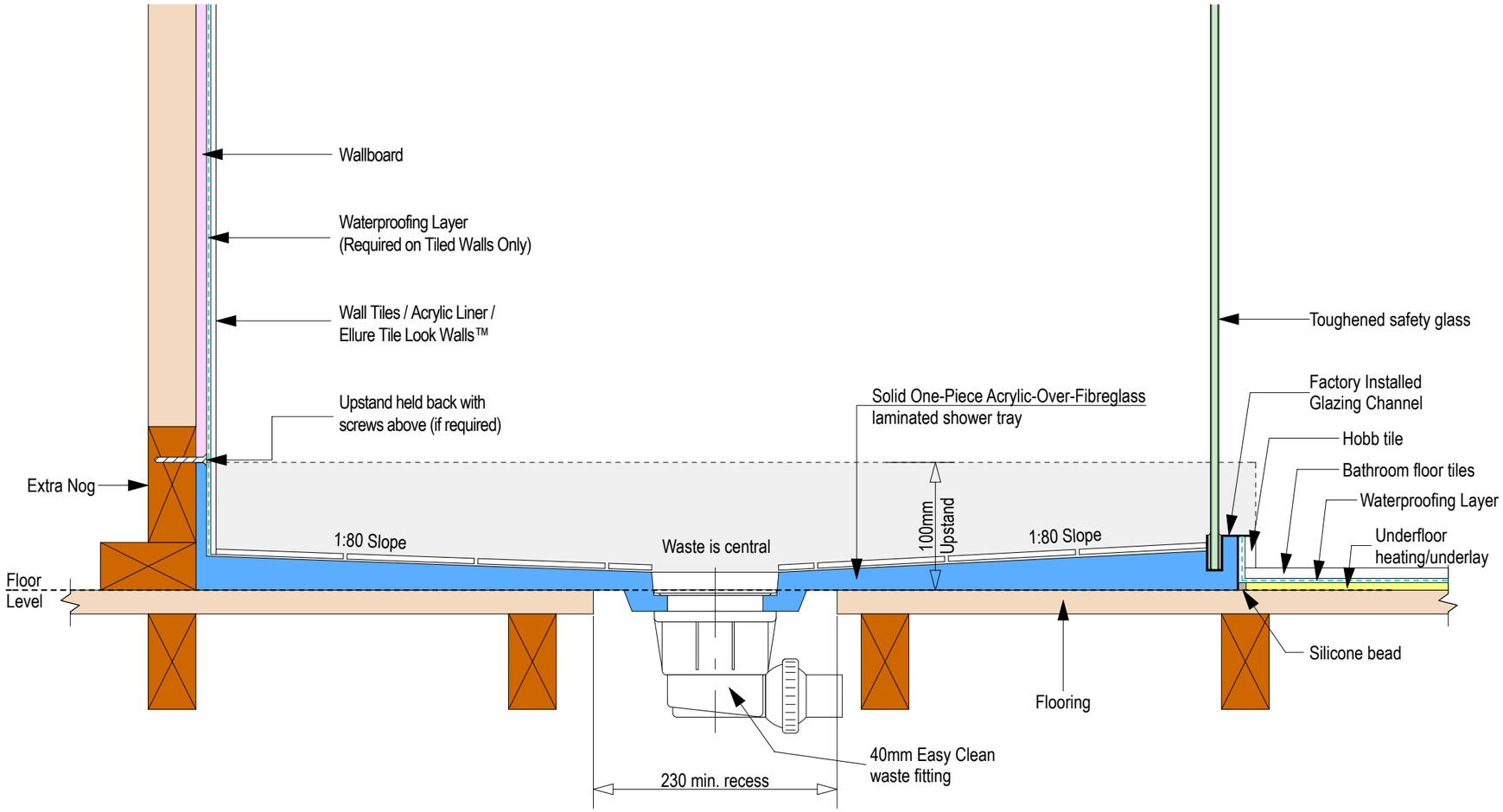

EasyTile

atlantis

Base Profile 1 - Concrete Floor

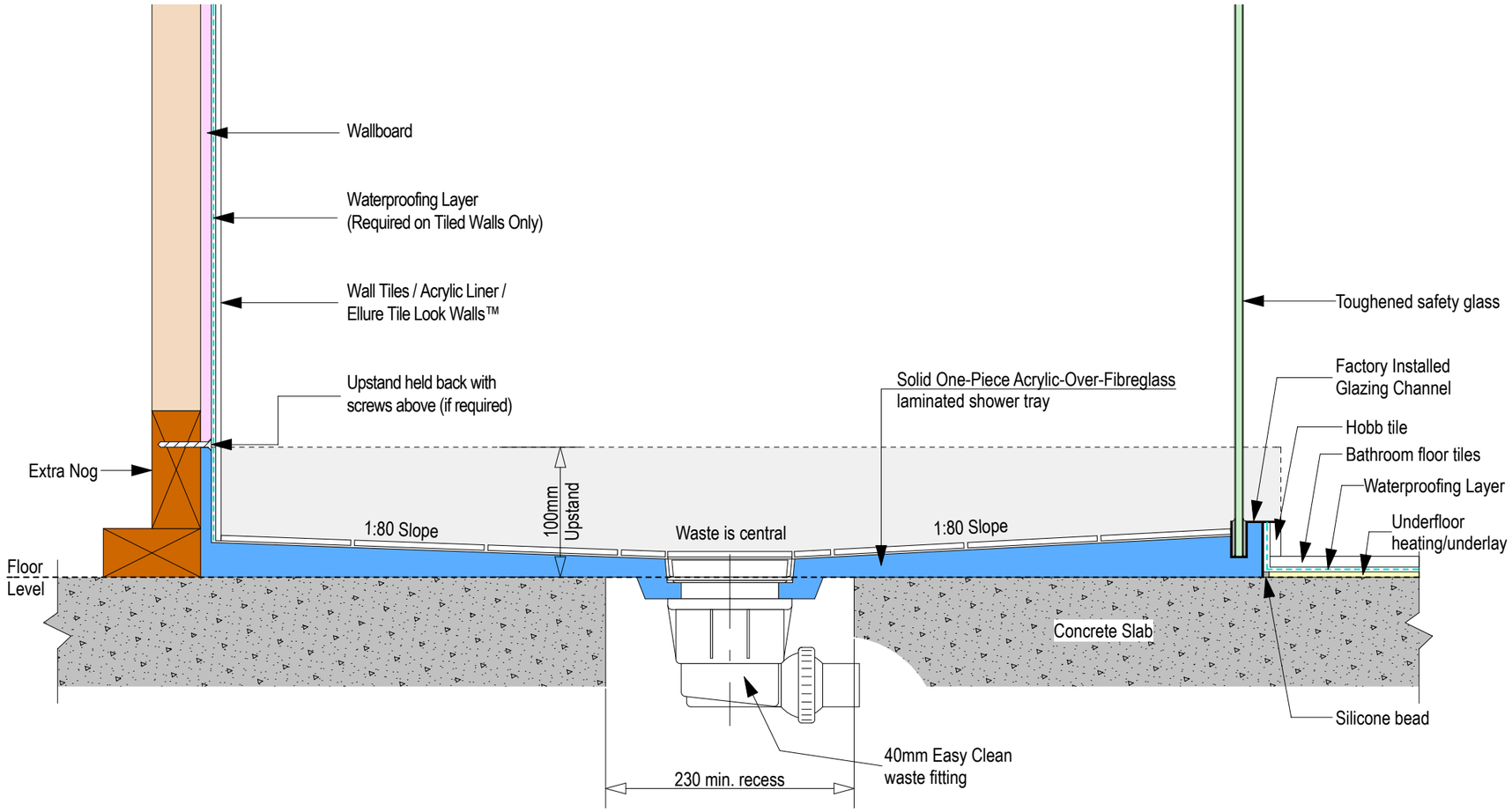

EasyTile

atlantis

Easytile 3D

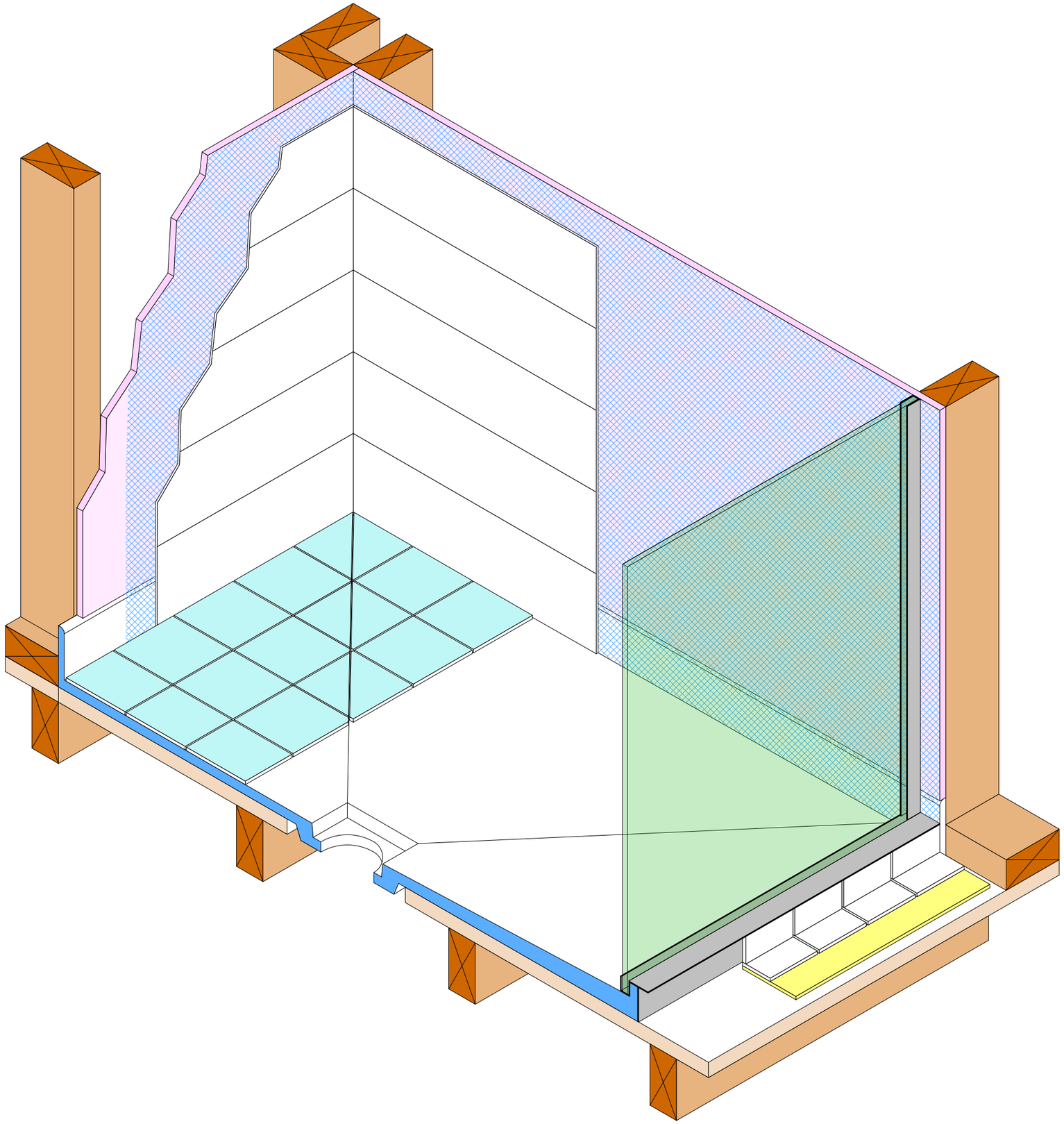

EasyTile

atlantis

Easytile