BetteLux

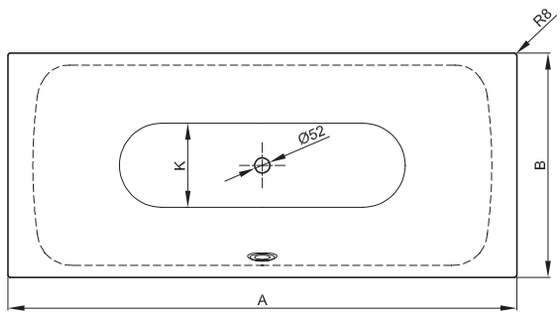

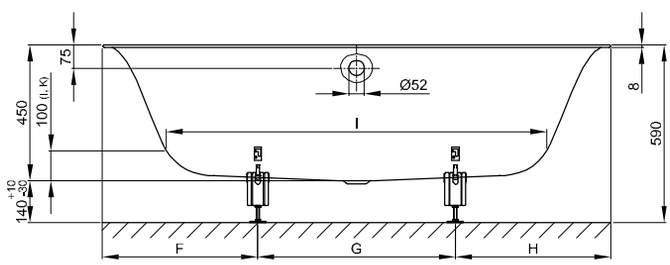

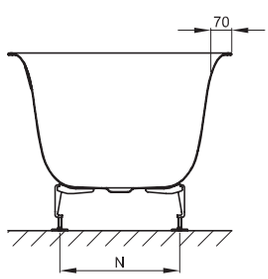

Information

Due to the folded edge, standard commercially available bath anchors cannot be combined. We therefore recommend the BetteWallBracket (item no. Z0008669) for mounting.

For professional installation we recommend the use of the original bath feet B23-1500.

Available with matching washbasin BetteLux.
→ p. 326

Scope of delivery

Including noise-reducing sound-dampening mats.

Design: Tesseraux + Partner

Dimensions

article no.	dimensions in mm	A	B	F	G	H	I	K	N	volume*
3440	1700 × 750 × 450	1700	750	495	710	495	1270	505	400	156 litre
3441	1800 × 800 × 450	1800	800	495	810	495	1345	545	450	185 litre
3442	1900 × 900 × 450	1900	900	520	860	520	1420	615	500	234 litre

*Water content less 70 litres (for human displacement). Subject to alteration and production tolerance.