Design Guide: Selective Laser Sintering (SLS)

Xometry

Table of Contents

Overview

Selective laser sintering is an additive manufacturing process where a laser precisely fuses a bed of nylon powder to construct a part from a 3D file. The machine will construct the part cross-section by cross-section at 0.0047” (120 um) layers from the bottom-up until completion. SLS parts come out with a white, slightly grainy, matte finish. Post-processing options are available to give parts a more desired look and feel.

Given that the part is printed from a powder bed by a laser sintering material, there are limits to certain features that the process can create.

This guide covers specific details on how to avoid unintended failures when designing for SLS, such as: wall thickness, gaps, holes, font sizes, pins, pockets and cavities. To avoid these failures be sure to meet minimum tolerances discussed, or design features needed to eliminate the possibility of certain failures from occurring.

SLS Durable White Nylon is a Nylon 12 material. The finish of a SLS part is matte stark white with a “sugar cube” like texture.

Note:

It’s important to know that designing in SLS is an iterative process, and features often do not print as desired the first time. CAD may require editing and offsets to optimize for the process. Be patient and work with the support team at Xometry to design every feature correctly.

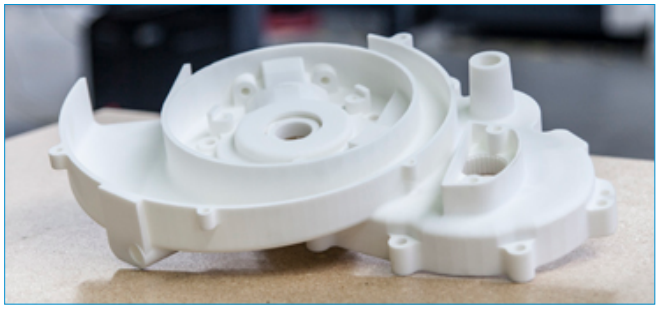

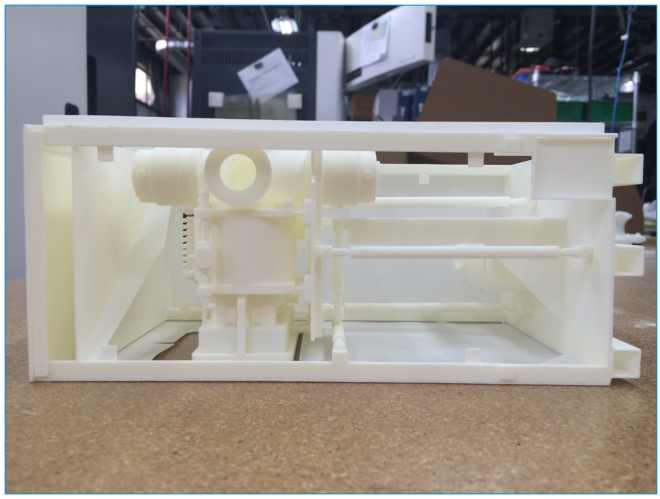

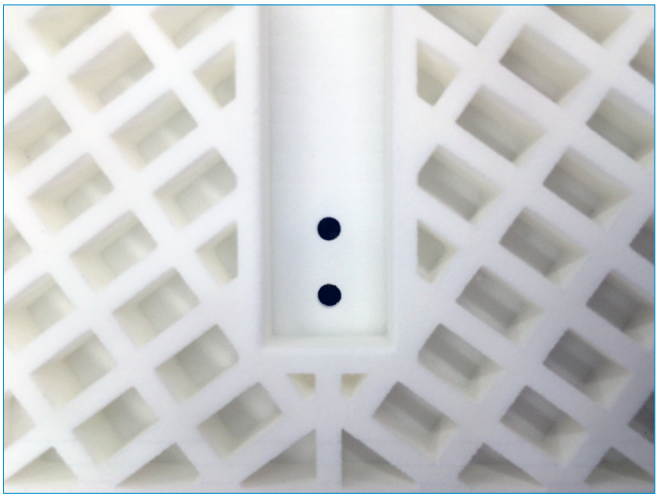

Tolerances

General Tolerances

- +/- 0.005” or +/- 0.0015” per inch; (+/- 127 um or +/- 40 um) whichever is greater
- Build area up to 13” x 13” x 20” (13” max dimension preferred); 330mm x 330mm x 508mm (330mm max dimension preferred)
- 0.006” (0.15mm) offset to small gaps and holes
- Prints in 0.0047” (120 um) layers
- Typically a 0.005” surface offset on mating surfaces - both male and female - will increase the chance of success when printing in SLS

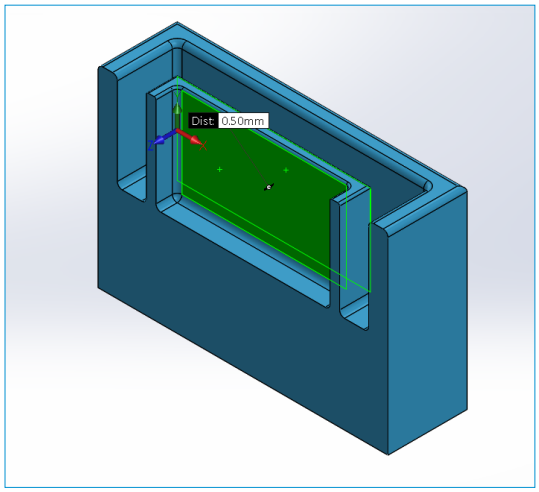

0.5mm wall thickness

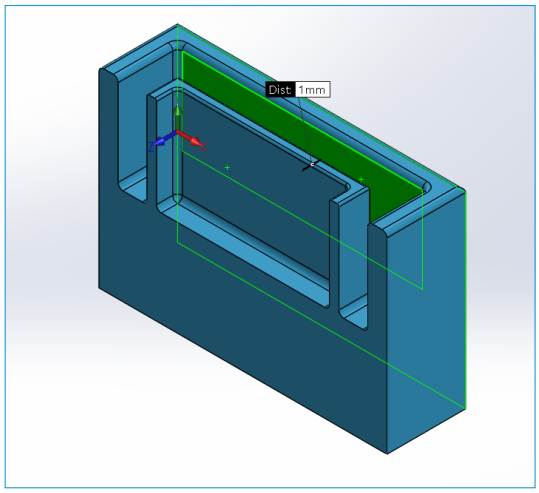

1mm wall thickness

Wall Thickness

Xometry recommends at least 0.020” (0.5mm) wall thickness on any part with over 0.040” (1mm) preferred. Walls that are thinner than 0.020” (0.5mm) tend to deviate significantly and over-thicken due to the laser heat over sintering the narrow feature.

How to Design Around Thin Walls:

Be sure to have at least a wall with 0.020” (0.5mm) for small parts, but at least a 0.040” (1.0mm) for larger parts. The larger the part, the larger the wall should be to ensure it is supported properly. There is usually little need for a part to have walls over 0.200” (5.0mm).

Note:

Thicker geometries and walls with variable thickness are at risk of deformation due to shrinkage and stress. In general, follow wall design rules for injection molding to achieve a more uniform and consistent part.

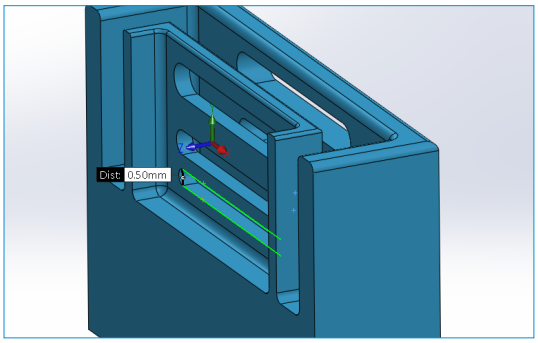

0.5mm gap on thin wall

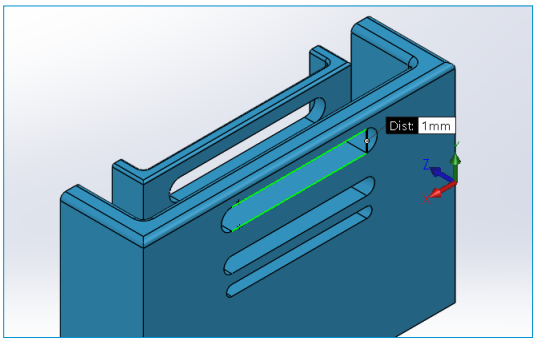

1mm gap on thick wall

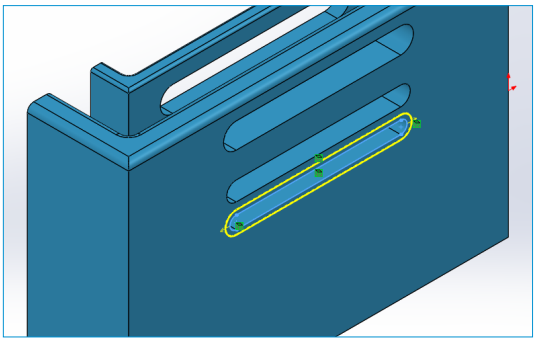

Offset Gap 0.007in

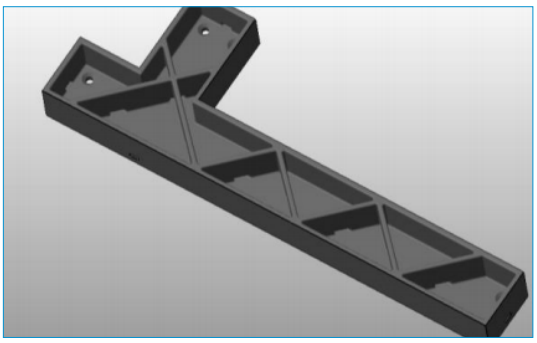

Lightweighting

Gaps

Gap resolution in SLS not only depends on the width of the gap, but also the thickness of the wall on which the gap is printed. Thinner walls allow the resolution of the gaps to increase because material is easier to clear, and less material will prevent the laser from fusing too much material due to trapped or radiant heat (known as over sintering). Thermal shrinkage might also shrink the designed size of smaller gaps on large surfaces.

How to Design Around Thin Gaps:

If you are creating a small part, be sure to use thinner walls that contain gaps to avoid over sintering. Lightweighting parts wherever possible, as one would do when designing for injection molding, will help decrease the amount of material in the part. This not only saves money, but also prevents over sintering. Offset thin or irregular gaps 0.006” – 0.008” (0.15mm - 0.20mm) to account for shrinkage due to over sintering and subsequently end up with a part that is closer to your designed measurements.

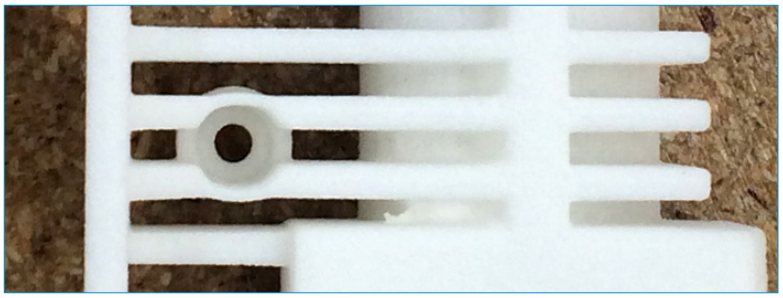

Successfully printed gaps

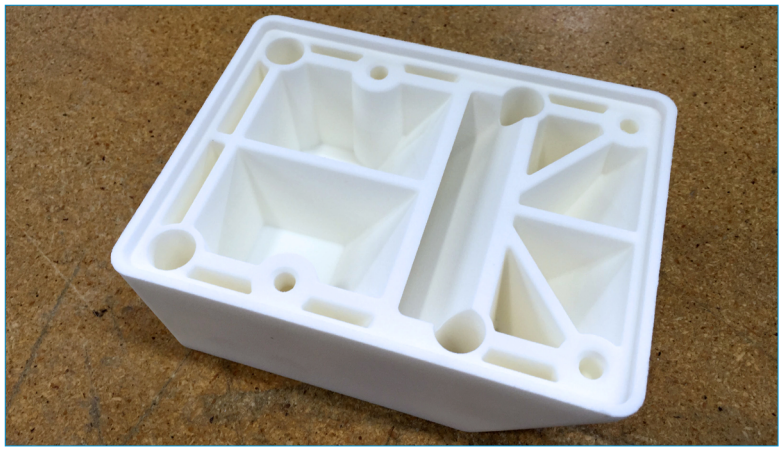

Successfully printed lightweighting

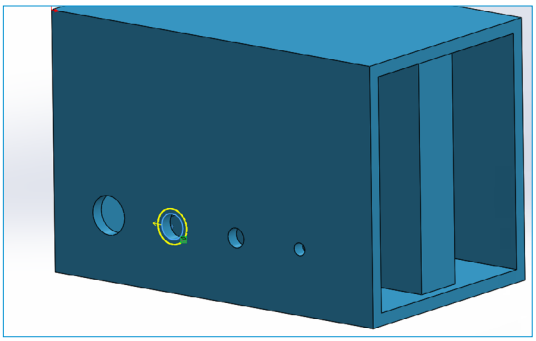

Offset hole

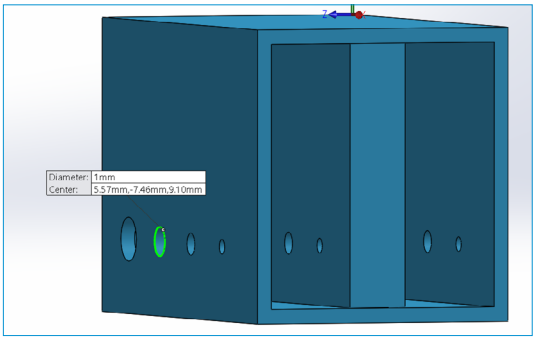

1mm diameter hole

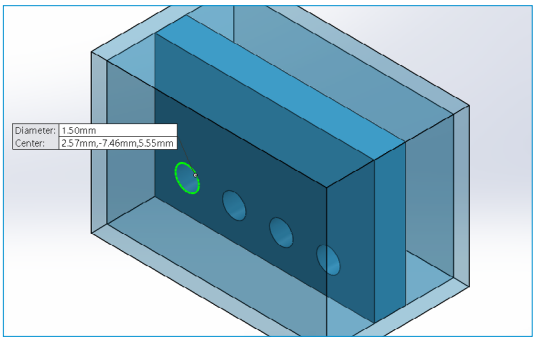

Interior hole

Unsuccessful small printed holes

Holes

Material is difficult to clear from small holes, holes in interior cavities, or holes closing up due to the radiant heat from the laser over sintering material. Like gaps, holes depend on the thickness of the walls on which they are printed as well. Similar to gaps, the thinner the wall, the more easily the hole can be cleared.

Xometry will open up holes greater than 0.040” and less than 0.375” as long as it’s accessible and a standard bit is available. This is a complimentary service. For irregular or inaccessible holes please follow the rules below - particularly if there are any critical mating features.

How to Design Around Small or Irregular Holes:

If possible, decrease the wall thickness that the hole is placed on to help material clear and to reduce shrinkage. Offset small hole surfaces by 0.006” – 0.008” (0.15mm - 0.20mm) to account for shrinkage due to over sintering. We recommend designing holes with standard drill bit sizes to ensure exact sizes when drilling out holes during post-processing.

Note:

Through holes must also allow for line-of-sight clearance to ensure all material is cleared during post-processing.

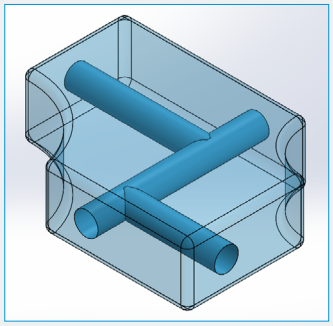

Line-of-sight (correct)

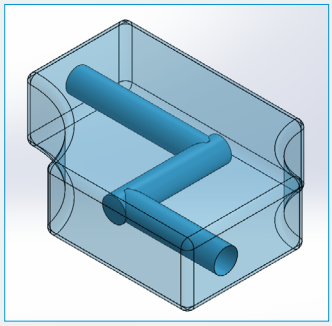

No line-of-sight (incorrect)

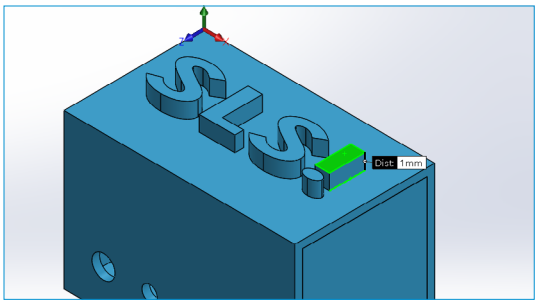

Text height

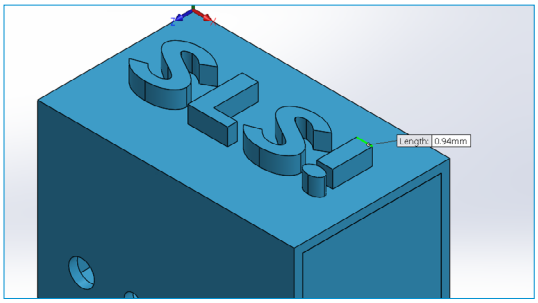

Text width

Font size legibility test

Font Sizes

Text that is cut out of the material is much less legible than text that protrudes from the material, as SLS actually has more difficulty removing material from the former. SLS is, however, able to print text legibly with a thickness of at least 0.017” (0.43mm) at a height of 0.022” (0.56mm).

Designing Parts with Text:

Be sure your text is at least 0.017” (0.43mm) thick and 0.022” (0.56mm) high to prevent letters from becoming illegible. Make sure to use fonts with mid-sized or wider character widths in a regular font weight or heavier - an example of the smallest legible thickness is 16 point Arial. Fonts to avoid include any with “condensed” in the name, those with narrow character widths, and anything less than regular font weight.

Note:

Engraved letters are much less legible, so be sure to compensate with larger thickness and depth than would be acceptable for protruding letters. Xometry also recommends to use a 3-5 degree draft when extruding text, especially with certain lower case characters such as “i” or “j.” The extra taper from the draft can significantly help in preserving delicate details.

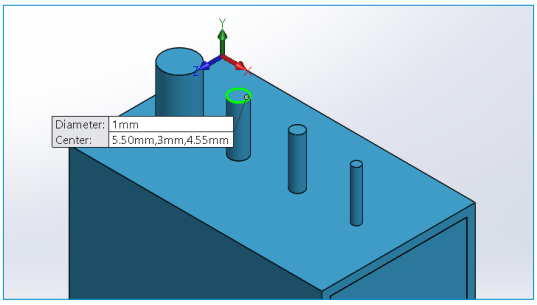

Pin diameter

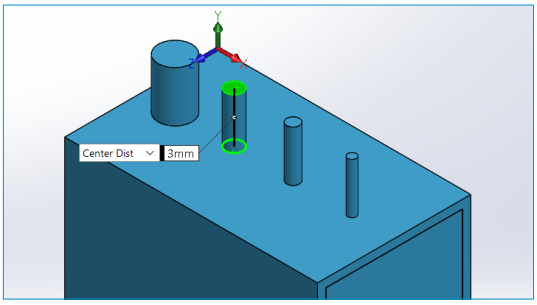

Pin height

Pins

The main difficulty when designing pins for SLS is the risk of small pins being too fragile and breaking off during post-processing.

Designing Parts with Pins:

The taller the pin, the greater its risk of breaking; increasing its diameter will give a tall pin more strength. Shorter pins can subsequently have a smaller diameter without breaking. Alternatively, part performance can be improved by creating a hole where a pin would be and inserting a separate metal pin during post-processing.

Note:

Create a 0.006” – 0.008” (0.15mm - 0.20mm) offset to ensure pins fall closer to the designed diameter when printed.

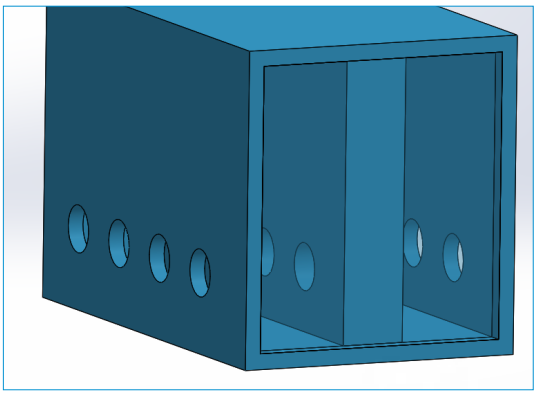

Cavity with relief holes (correct)

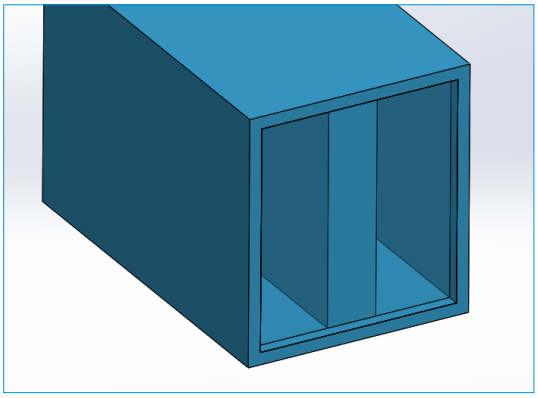

Cavity without relief holes (incorrect)

Pockets and Cavities

Parts with confined cavities or pockets make it impossible to remove material during post-processing.

Designing Around Cavities and Pockets:

When parts have pockets or cavities, make sure there are relief holes to allow un-sintered material to exit the part when completed. Xometry recommends 2+ relief holes 0.500” (12.7mm) in diameter if possible. Building these holes with line-of-sight allows for much more successful cleaning.

Note:

Xometry does not quote or build SLS parts with fully confined hollows (e.g., a balloon), as the un-sintered powder trapped in such a part cannot be removed. Xometry also may apply this rule for parts with exit holes that would be too small to rapidly remove trapped powder (e.g., a salt shaker).

Features

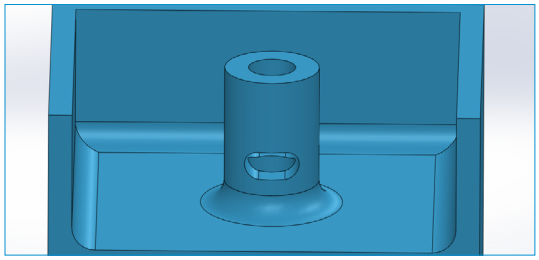

Boss fillet

Fillets

Fillets are your friend! Adding generous fillets to connections is crucial in order to increase structural support.

Adding Fillets:

It is important to make fillets as large as possible in order to increase the amount of surface area involved in a connection.

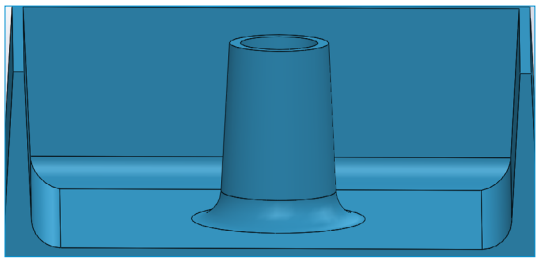

Boss draft

Drafts

Drafting extrusions outwards is another way to drastically increase their support strength due to the resulting increase in area at the base.

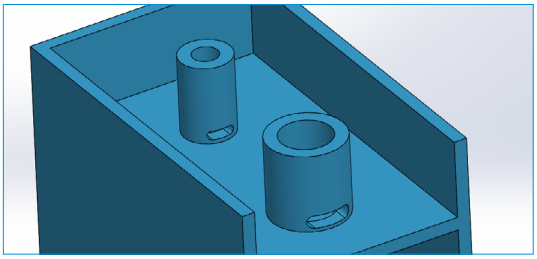

Boss exit holes

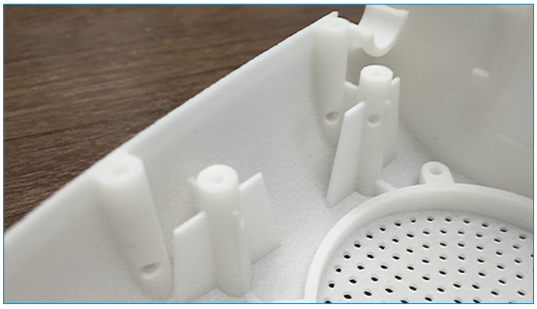

Successfully printed bosses with exit holes

Exit Holes

In many cases, material is very difficult to remove from blind screw bosses, long holes, and enclosed geometry. One way to eliminate this problem is to design exit holes along the side of the boss or enclosure to allow material to clear during post-processing.

How to Design:

Exit holes are cut out along the side of the hole. You may need several exit holes or, depending on the depth of the hole in your part, you may only need one. Xometry generally recommends adding an exit hole about every 0.500” (12.7mm).

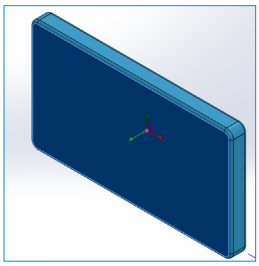

Broad, solid part (incorrect)

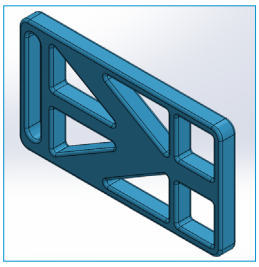

Broad, contoured part (correct)

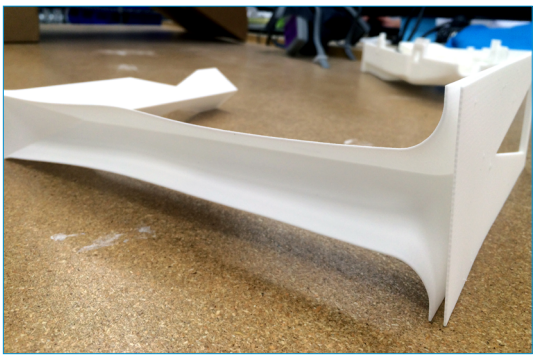

Warping due to uneven cooling

Long, Broad Parts

Large parts are prone to uneven cooling due to their enormous surface area, which creates unpredictable warping. This issue is particularly prevalent in surfaces with 2 long axes and 1 short axis (e.g., a cutting board). To eliminate this possibility, create cut-outs where ever possible to reduce the amount of heat generated on the part. Also, look for opportunities to add ribs or contours to the part - these may hold it stiffer to prevent warping.

Finishes

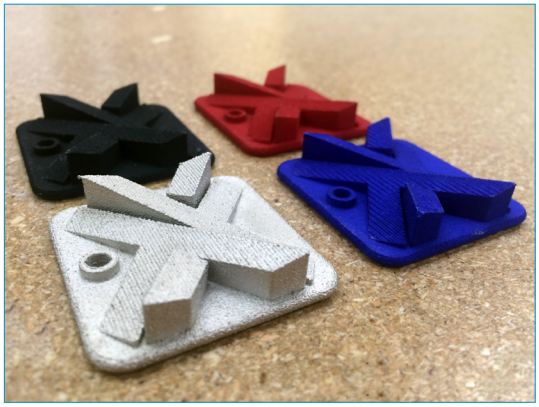

Examples of different finishes

Tapped holes in a printed part

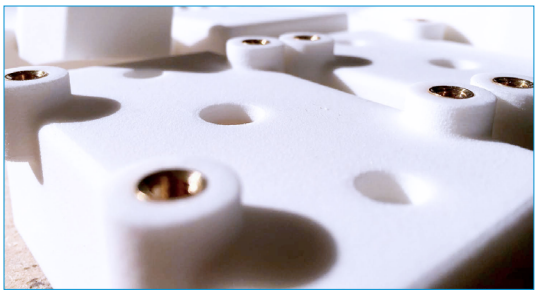

Inserts in a printed part

SLS is conducive to many types of post-processing as well! Xometry offers the following types of finishes for SLS parts:

- Dyeing – Color options including black, blue, green, red, and yellow
- Nickel-plating – Drastically increases the strength of SLS parts by coating them in around a 0.002” - 0.006” (0.05mm - 0.15mm) layer of nickel
- Media tumbling – Gives parts a much smoother finish
- Painting
- Sanding – Gives parts a smooth finish much like with media tumbling, but also retains crisp edges that media tumbling cannot
- Features – Tapping and Inserts

Regardless of what your SLS part might be used for, applying the proper finish will dramatically improve its performance.

Resources at Xometry

Instant Quoting

Upload your 3D CAD file to our instant quoting page at **get.xometry.com/quote** to get started.

Support Team

Contact our support team to speak directly with Xometry's engineers:

Email: **support@xometry.com**
Phone: (240) 252-1138

Live Engineering Support

Click the Help button anywhere on **xometry.com** for FAQs and other helpful articles, or to chat live with our engineers.