Model	CT-60
SIZE	600*600*423MM
SHEET OF SHEETS	1 OF 1

NO.	Graphic	Size	Quanlity
A		Ø15*10	14
B		Ø6*35	14
C		Ø8*30	14

Step1

A	8 PCS
B	8 PCS
C	8 PCS

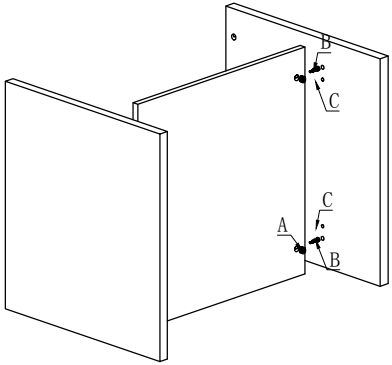

Step2

A	4 PCS
B	4 PCS
C	4 PCS

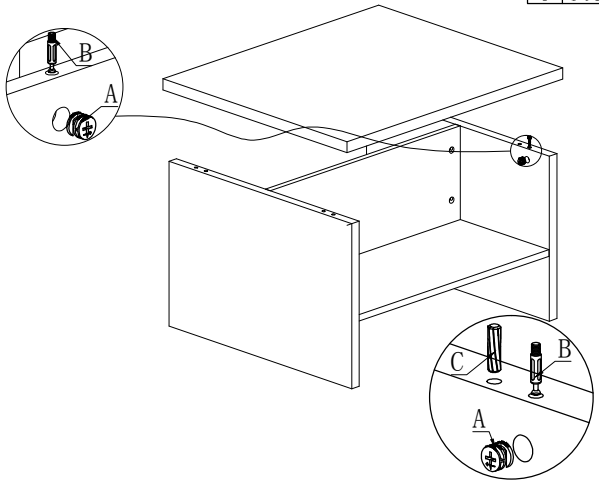
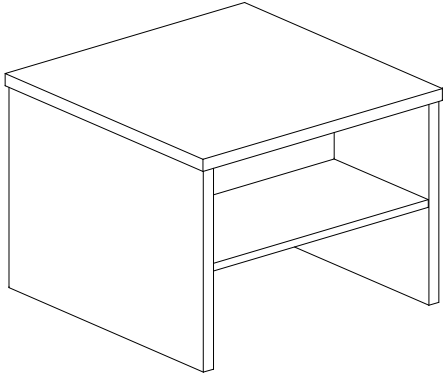
Finish