Model	AP-24136
SIZE	2400*1200*750MM
SHEET OF SHEETS	1 OF 1

NO.	Graphic	Size	Quanlity
A		Ø15*10	4
B		Ø6*35	4
C		Ø8*30	4
D		Ø6*12	8
E		Ø4*20	10

Step1

D	8 PCS

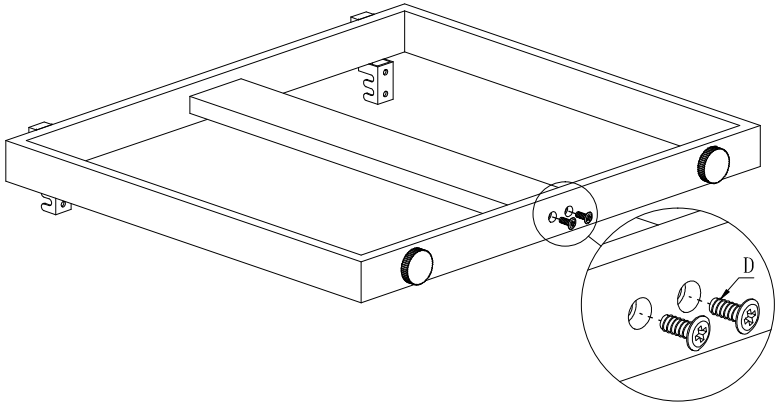

Step2

A	4 PCS
B	4 PCS
C	4 PCS

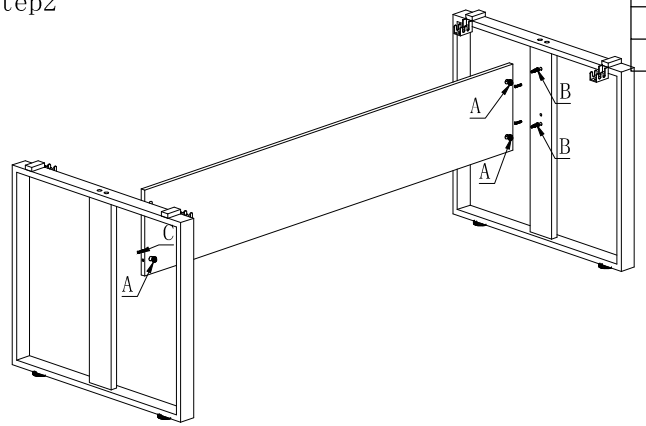

Step3

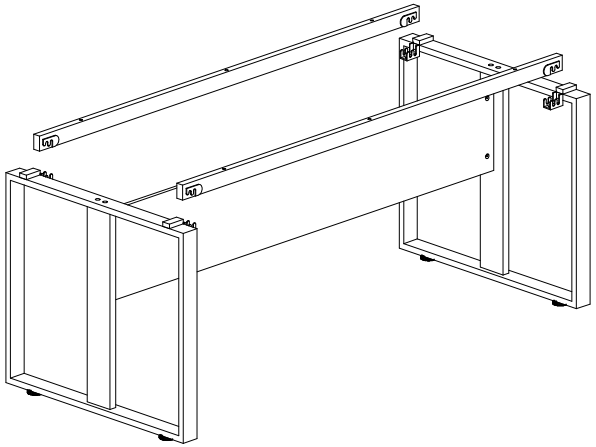

Step4

E	8 PCS

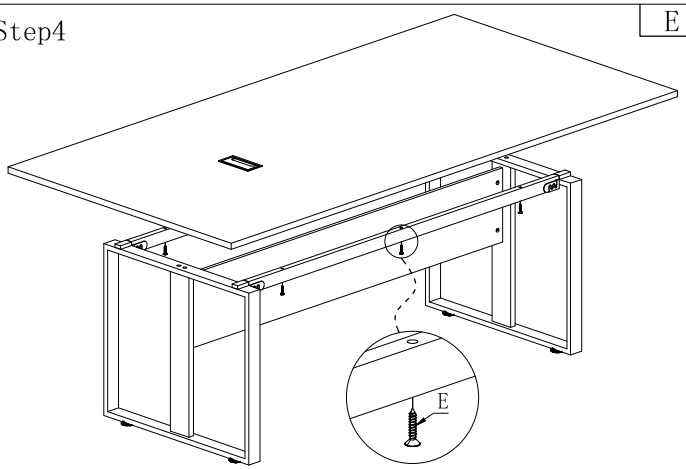
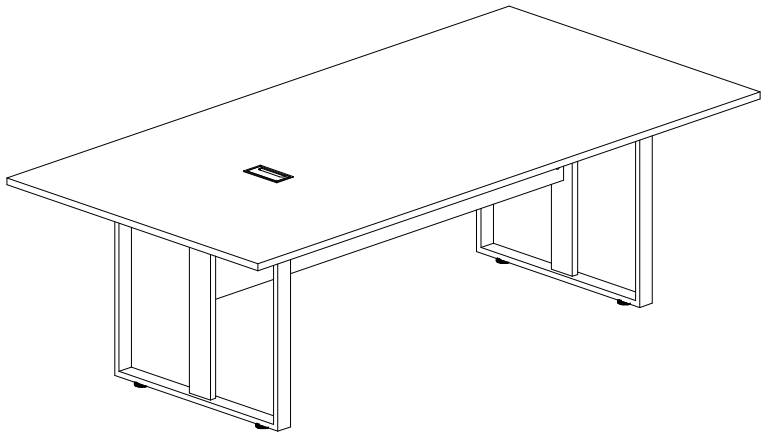
Finish