MODEL : BL8016
DIMENSION : 800W × 410D × 1640mmH
DESCRIPTION : HIGH CABINET

ASSEMBLY INSTRUCTION

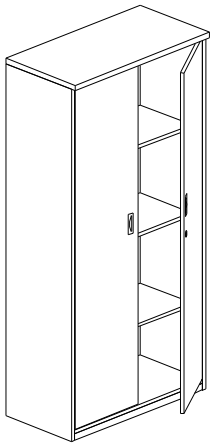

	A	B	C	D	E	F	G	H	I	J	K	L
	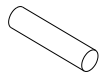	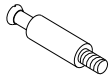					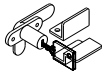	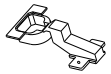				
	18 PCS	12 PCS	12 PCS	6 PCS	8 PCS	8 PCS	1 PC	6 PCS	PCS	PCS	PCS	PCS

	BOARD NAME	DIMENSION
①	top panel	798 × 408 × 25 =1PC
②	right and left side panel	1605 × 388 × 18 =2PCS
③	bottom panel	762 × 387 × 16 =1PC
④	fixed panel	762 × 368 × 16 =1PC
⑤	back beam	772 × 776 × 9 =2PCS
⑥	foot	762 × 40 × 16 =2PCS
⑦	move panel	760 × 348 × 16 =2PCS
⑧	door	1543 × 378 × 16 =2PCS

STEP1

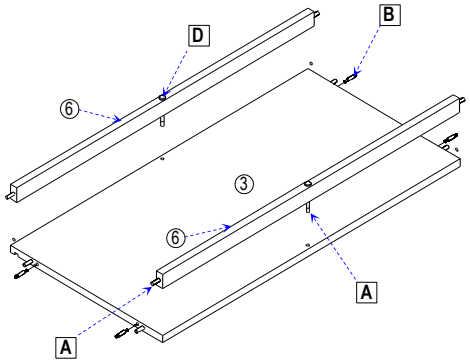

STEP2

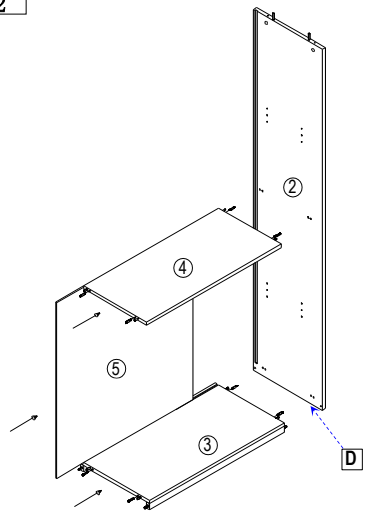

STEP3

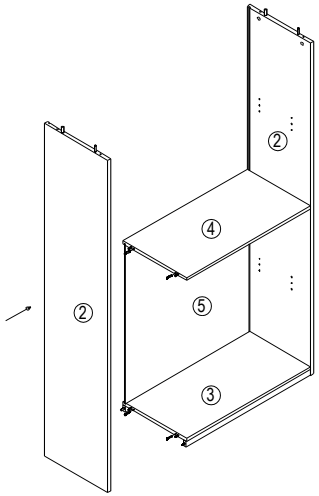

STEP4

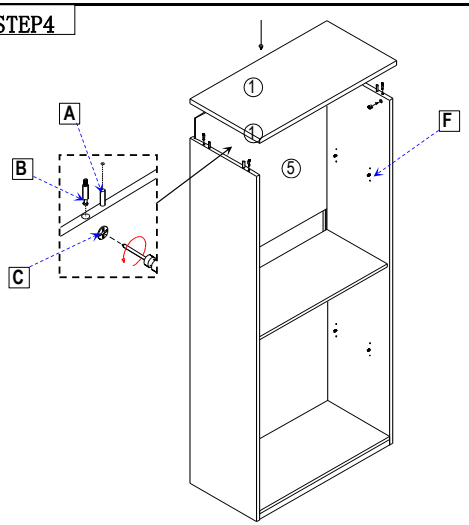

STEP5

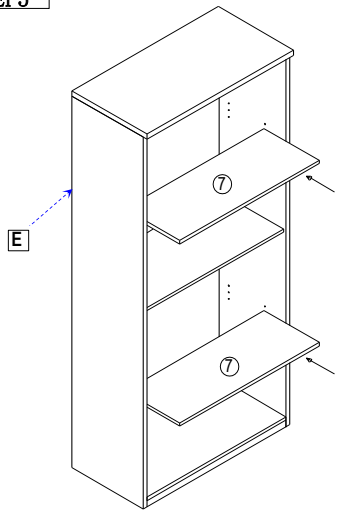
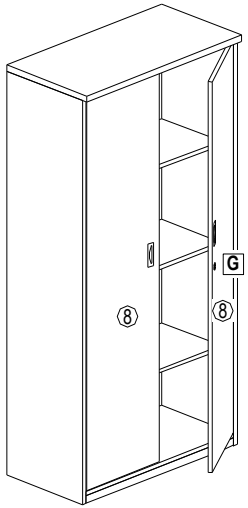
STEP6