MODEL	BL-748
DIMENSION	800W × 410D × 1800mmH
DESCRIPTION	HIGH GLASS CABINET

ASSEMBLY INSTRUCTION

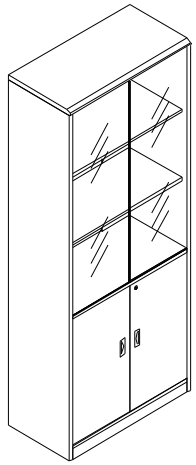

	BOARD NAME	DIMENSION
①	top panel	798 × 408 × 25 =1PC
②	side panel	1764 × 388 × 18 =2PCS
③	bottom panel	762 × 387 × 16 =1PC
④	fixed panel	762 × 386 × 25 =1PC
⑤	up panel	771 × 1129 × 9 =1PC
⑥	down panel	771 × 574 × 9 =1PC
⑦	foot	762 × 40 × 16 =2PCS
⑧	wood door	557 × 375 × 16 =2PCS
⑨	move panel	759 × 300 × 16 =3PCS
⑩	glass door	1111 × 379 × 5 =2PCS

A	B	C	D	E	F	G	H	I	J	K	L
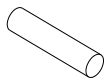	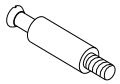			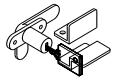	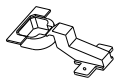		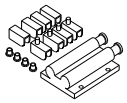	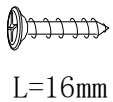 L=16mm			
18 PCS	12 PCS	12 PCS	6 PCS	10 PCS	4 PCS	12 PCS	1 PC	34 PCS	1 PC	PCS	PCS

STEP1

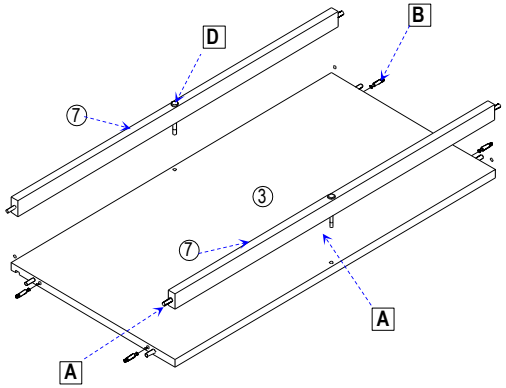

STEP2

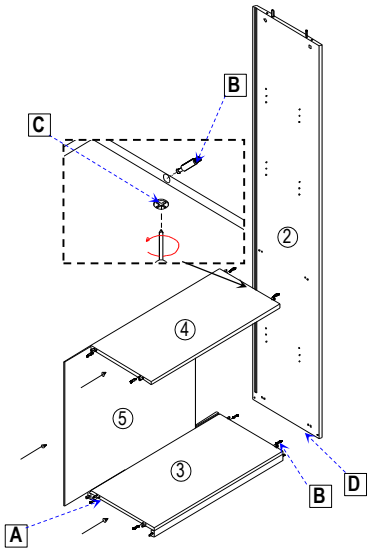

STEP3

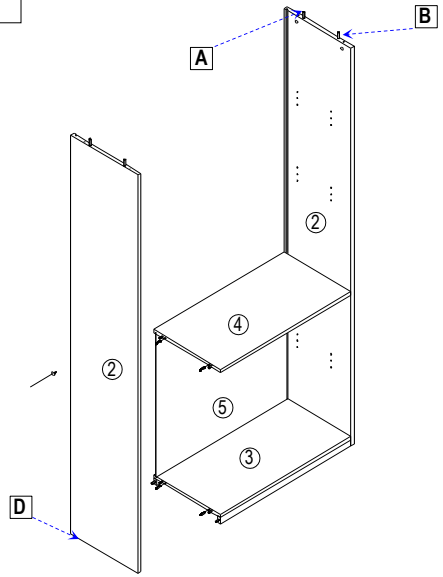

STEP4

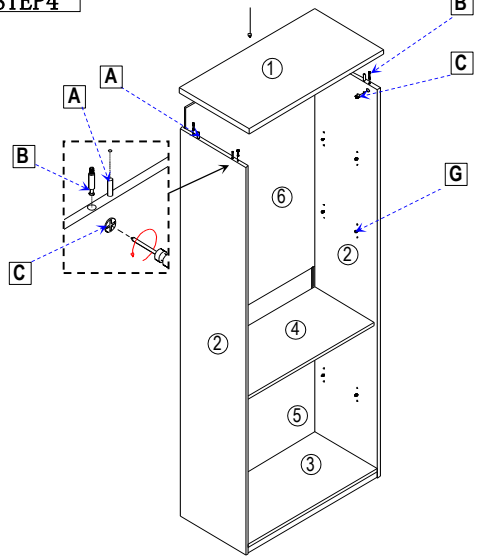

STEP5

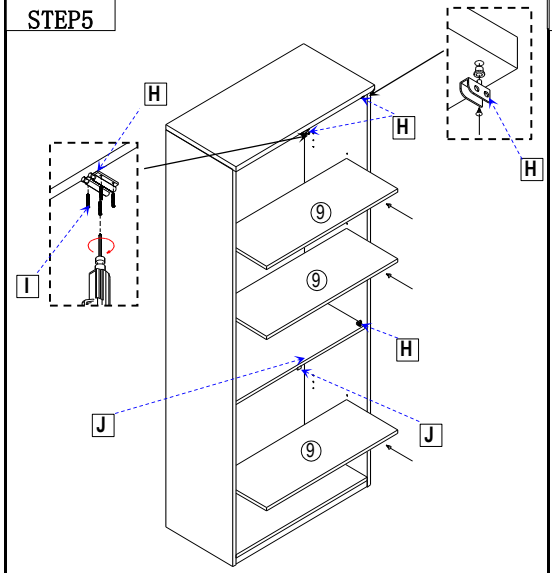
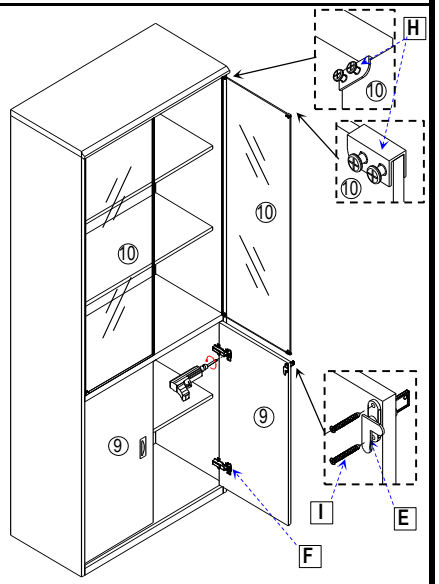
STEP6