PINS & GATES (SWEEP)

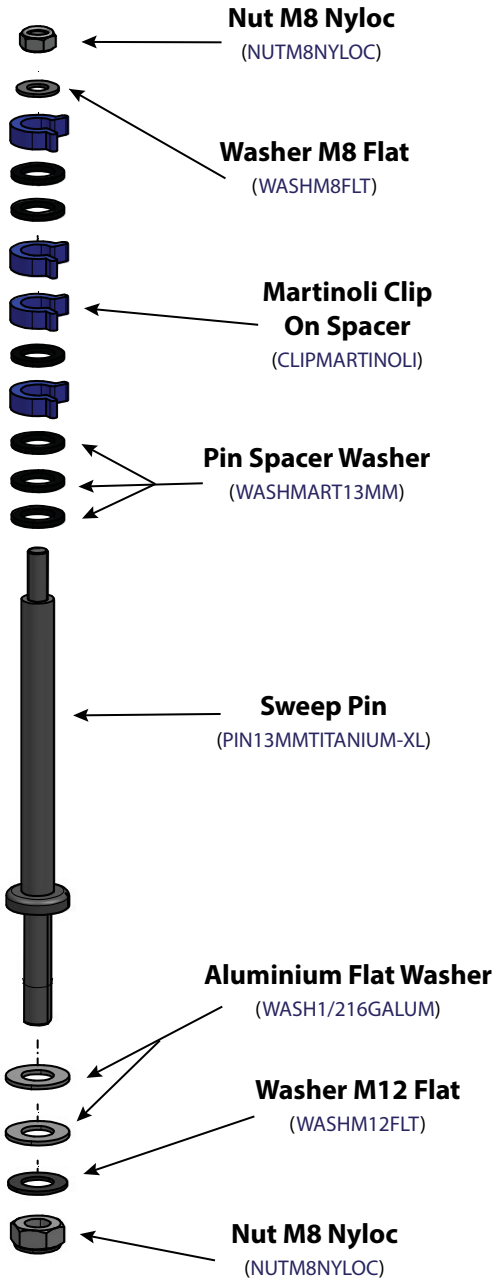

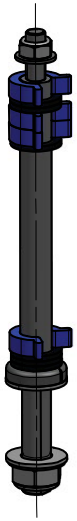

Pin Rowing Complete
(PINSWEEP)

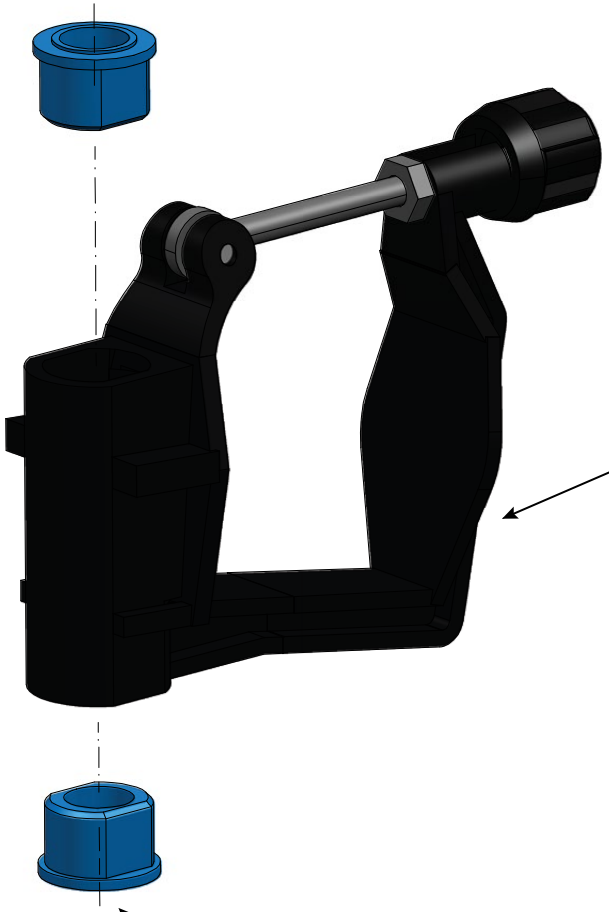

C2 Oarlock
(C2O401)

C2 Oarlock Universal Bushing
(C2O473)
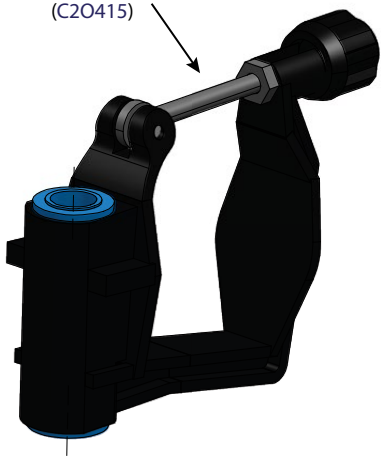
C2 Oarlock and Universal Bushing
(C2O415)