PINS & GATES (SCULL)

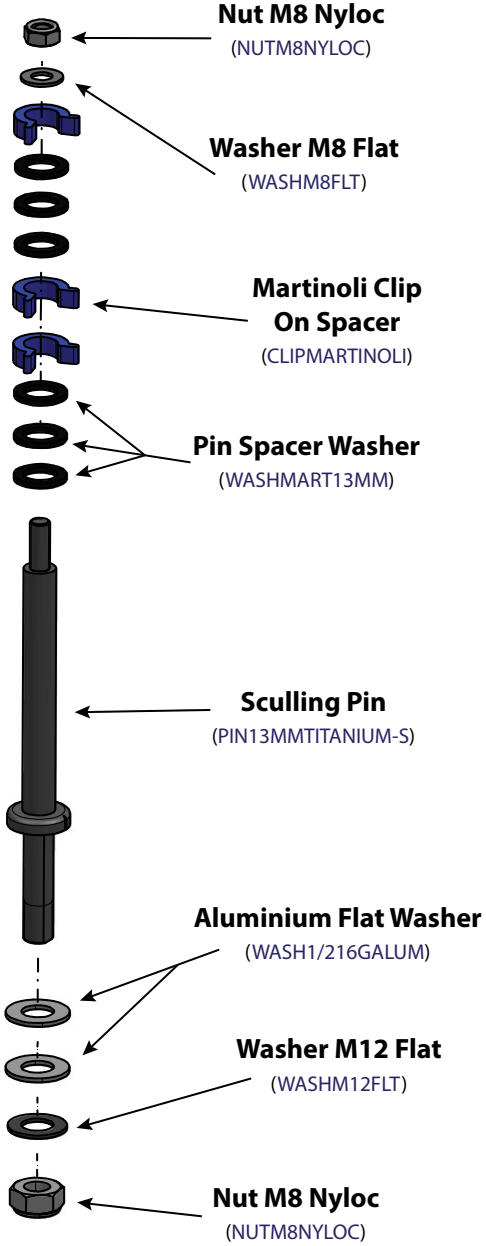

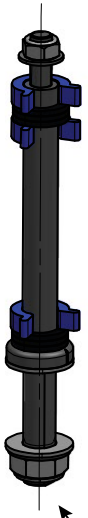

Sculling Pin Complete
(PINSCULLING)

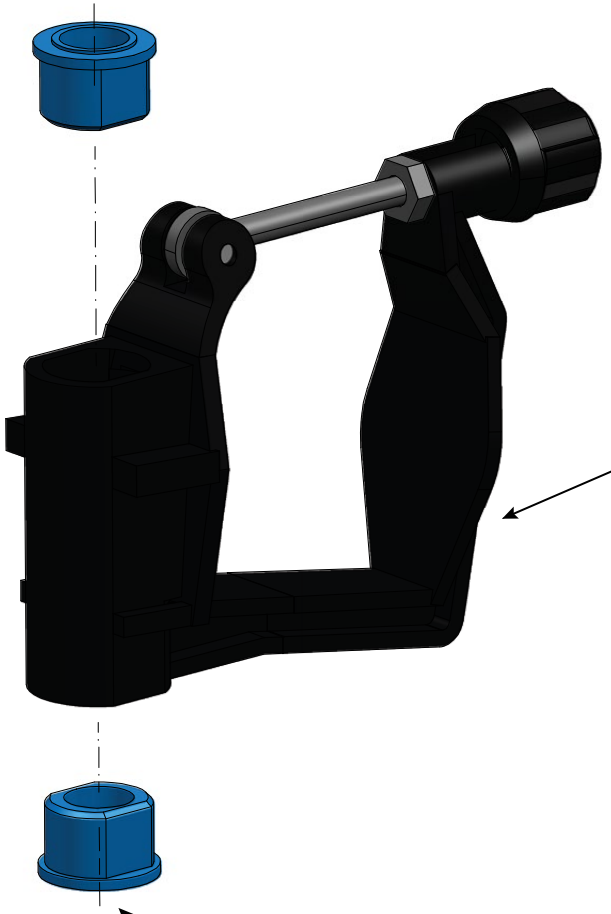

C2 Oarlock
(C2O402)

C2 Oarlock Universal Bushing
(C2O474)
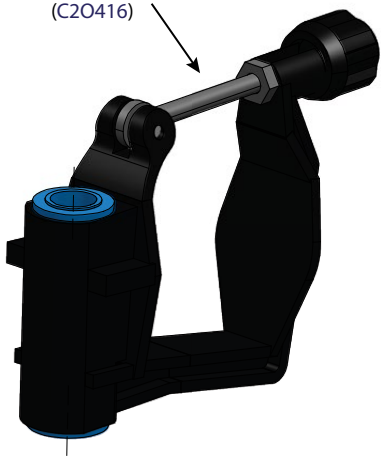
C2 Oarlock and Universal Bushing
(C2O416)