CARBON SEAT SCHEMATIC

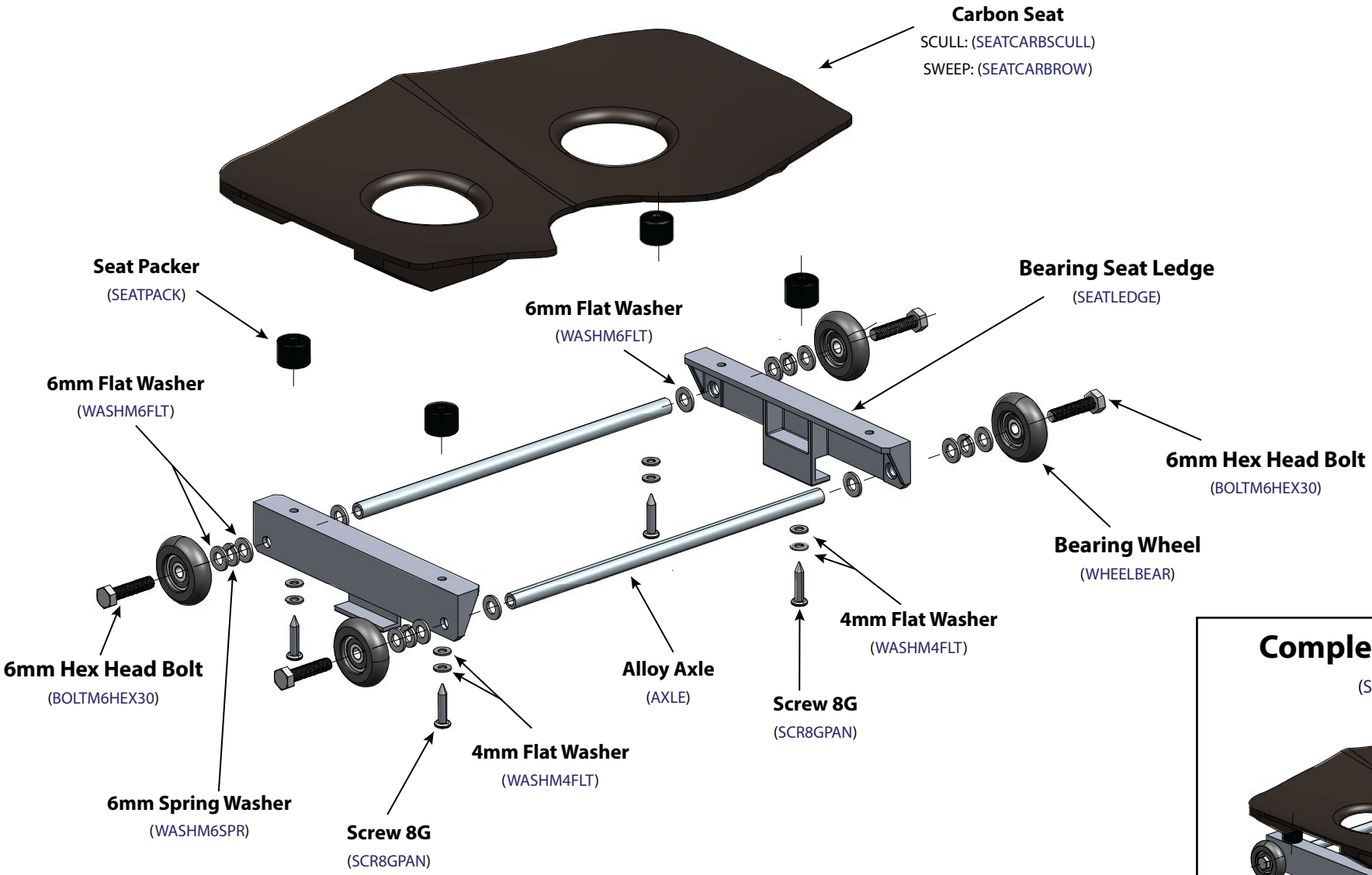

Complete Carbon Seat
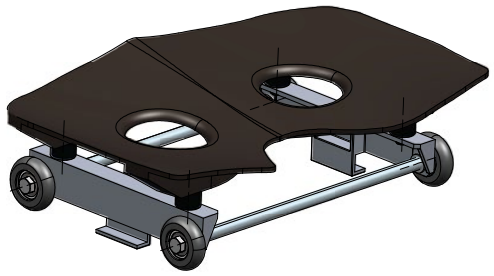
(SEATCCARBEAR)