CARBON SCULL STRETCHER SCHEMATIC

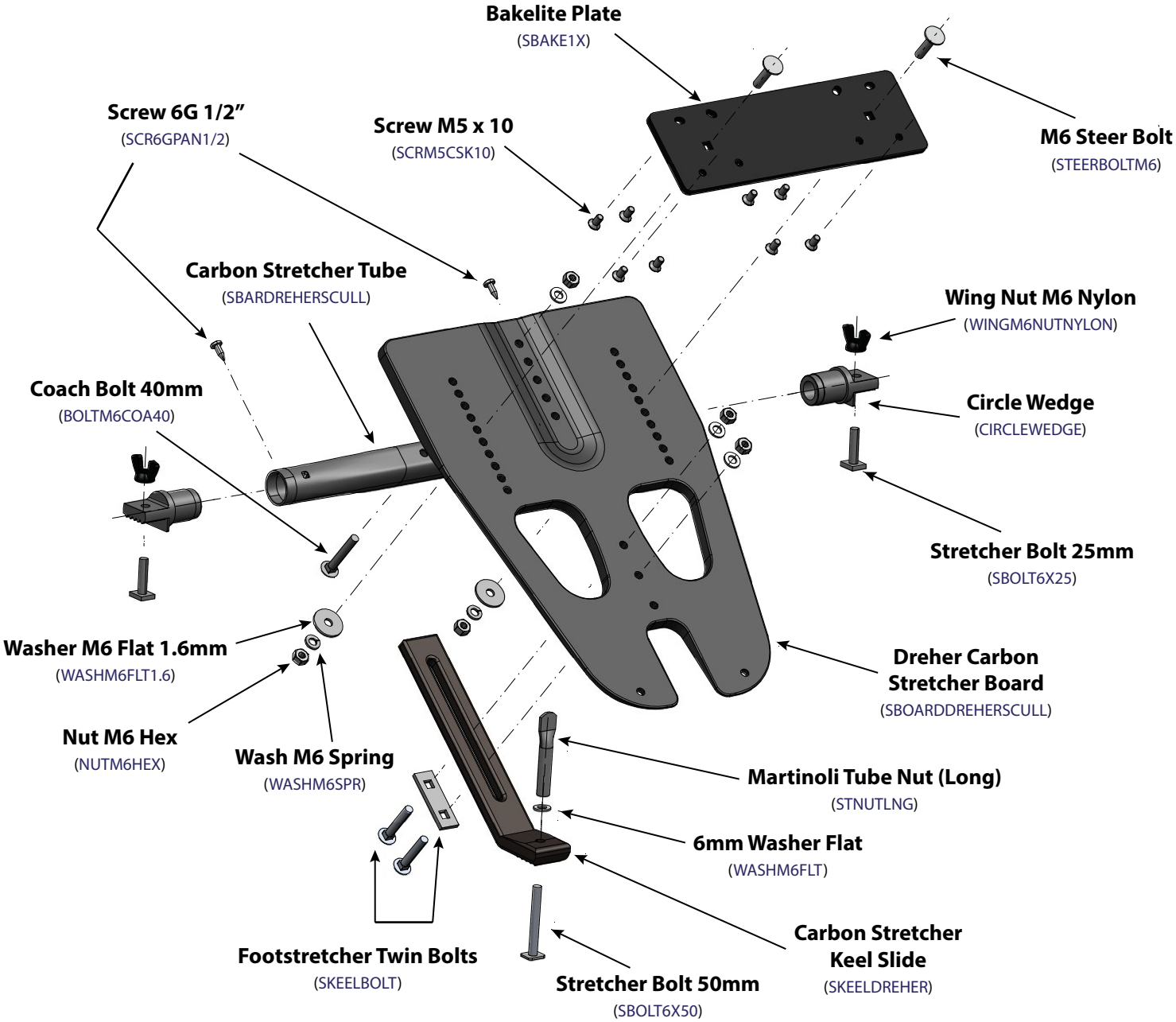

Scull Carbon Foot Stretcher
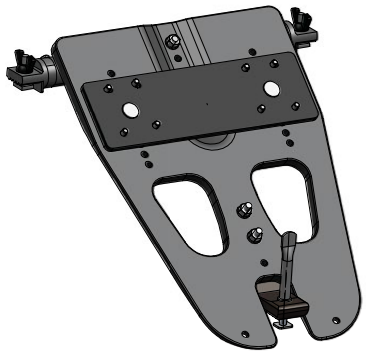
(STRETCARB1X)