IMPORTANT SAFEGUARDS

WARNING: To guard against injury, basic safety precautions should be observed, including the following.

READ AND FOLLOW ALL SAFETY INSTRUCTIONS

DANGER: To avoid possible electric shock, special care should be taken since water is employed in the use of aquarium equipment. For each of the following situations, do not attempt repairs by yourself; return the appliance to an authorized service facility for service or discard the appliance

1. A. If the appliance shows any sign of abnormal water leakage, immediately unplug it from the power source.

B. Carefully examine the appliance after installation. It should not be plugged in if there is water on parts not intended to be wet.

C. Do not operate any appliance if it has a damaged cord or plug, or if it is malfunctioning or if it is dropped or damaged in any manner.

D. To avoid the possibility of the appliance plug or receptacle getting wet, position aquarium stand and tank to one side of a wall mounted receptacle to prevent water from dripping onto the receptacle or plug. A "drip loop" should be arranged by the user for each cord connecting an aquarium appliance to a receptacle. The "drip loop" is that part of the cord below the level of the receptacle or the connector if an extension cord is used, to prevent water travelling along the cord and coming in contact with the receptacle. If the plug or receptacle does get wet, DON'T unplug the cord. Disconnect the fuse or circuit breaker that supplies power to the appliance. Then unplug and examine for presence of water in the receptacle.

2. Close supervision is necessary when any appliance is used by or near children.

3. To avoid injury, do not contact moving parts or hot parts such as heaters, reflectors, lamp bulbs, etc.

4. Always unplug an appliance from an outlet when not in use, before putting on or taking off parts, and before cleaning. Never yank cord to pull plug from outlet. Grasp the plug and pull to disconnect.

5. Do not use an appliance for other than intended use.

Customer Service: (803) 591-9500
(M-F 9:00 am - 5:00 pm Eastern Time)

The use of attachments not recommended or sold by the appliance manufacturer may cause an unsafe condition.

6. Do not install or store the appliance where it will be exposed to the weather or to temperatures below freezing.

7. Make sure an appliance mounted on a tank is securely installed before operating it. Make sure that the appliance is submerged at least to the "MINIMUM WATER LEVEL"

8. Read and observe all the important notices on the appliance.

9. If an extension cord is necessary, a cord with a proper rating should be used. A cord rated for less amperes or watts than the appliance rating may overheat. Care should be taken to arrange the cord so that it will not be tripped over or pulled.

10. This appliance has a polarized plug (one blade is wider than the other). As a safety feature, this plug will fit in a polarized outlet only one way. If the plug does not fit fully in the outlet, reverse the plug. If it still does not fit, contact a qualified electrician. Never use with an extension cord unless plug can be fully inserted. Do not attempt to defeat this safety feature.

INSTALLATION, SETUP, AND ADJUSTMENT

Install suction cups to exterior housing, parts e and f in figure 2. Place the clearvue filter into aquarium or terrarium in a vertical position, making sure to have it submerged at least to the minimum water line is shown in Fig. 1. To adjust the direction of the water outlet, turn the filter bowl left or right in the range between 0 and 90 degrees (see Fig. 5).

MAINTENANCE

In order to ensure continuous and efficient operation of the device, the filter cartridge should be regularly cleaned or replaced with a new one. To remove the filter cartridge, unplug the filter, gently lift out the filter cartridge and motor assembly, leaving the outer casing and suction attached in the aquarium. To remove cartridge simply turn it in either direction by 180 degrees (see Fig. 4) and lift out. At this point you can either replace the cartridge with a new one, or the bottom black plastic cap can be removed and the sponge pulled out for cleaning. Once the sponge is clean, replace sponge into cartridge and re-install black cap. To re-insert the cartridge put cartridge onto motor in reverse position then turn 180 degrees to secure into place.

In addition to cleaning or replacing the filter cartridge, it is also necessary to regularly clean the impeller and the impeller chamber (it is recommended that this operation be performed when changing the cartridge). The steps required to remove the rotor are shown in Fig. 2 and 3. Use a soft brush to clean the rotor chamber. Once clean, simply slide the assembly back into the casing that is already in aquarium

LIMITED 3-YEAR WARRANTY

Within three years from the date of original purchase, Cobalt Aquatics will repair or replace, at its option, anyClearvue Filter which is deemed defective in workmanship or materials. Please return the unit, together with proof of date of purchase: Call **803-591-9500 for return authorization and shipping address.** Damage or injuries resulting from negligence or misuse are not covered by this warranty. Incidental or consequential damages are specifically excluded. This warranty gives you specific legal rights. You may also have other rights which vary from state to state. *Because some states do not allow the exclusion of incidental or consequential damages, this exclusion may not apply to you.

Questions or Missing Parts:
Call Customer Service at 803-591-9500 (M-F 9-5EST)

MEDIDAS DE SEGURIDAD ADICIONALES

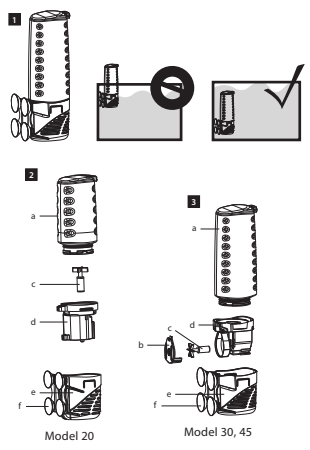

a. Filter Cartridge
b. Impeller Housing
c. Impeller
d. Motor
e. Filter Casing
f. Suction Cup

GARANTÍA LIMITADA DE 3 AÑOS

Dentro de tres años a partir de la fecha de compra original. La garantía no puede ser asignada ni transferida a ningún otro comprador o usuario posterior. En cualquier momento a partir de la fecha de compra, **Cobalt Aquatics** reparará o reemplazará, a su discreción, los calentadores de pecera **Clearvue** con defectos en la fabricación o los materiales. **Llamar al (803) 591-9500 para obtener una autorización de devolución y una dirección para el envío.**
NOTA: Asegúrese de envolver el calentador con cuidado para protegerlo durante el envío. El consumidor pagará el costo del envío luego de la reparación. Si el problema no está cubierto por los términos y condiciones de esta garantía, se avisará al consumidor y se le dará un presupuesto de los costos de reparación (con todos los costos de envío a cargo del consumidor). Si el presupuesto no es aceptado, el producto será devuelto con los costos de tranporte por cobrar. Los daños, la rotura de vidrios y las lesiones que sean consecuencia de la negligencia o uso incorrecto no están cubiertos por esta garantía. La pérdida de peces, las lesiones personales, la pérdida de bienes o los daños que resulten del uso de este calentador no están cubiertos por esta garantía. Están específicamente excluidos los daños incidentales o a consecuencia de*. Esta garantía le otorga derechos legales específicos. Usted también puede tener otros derechos que varían de un estado a otro.

*Debido a que algunos estados no permiten la exclusión de los daños incidentales o consecuenciales, es posible que esta exclusión no se aplique en su caso.

MESURES DE SÉCURITÉ SUPPLÉMENTAIRES

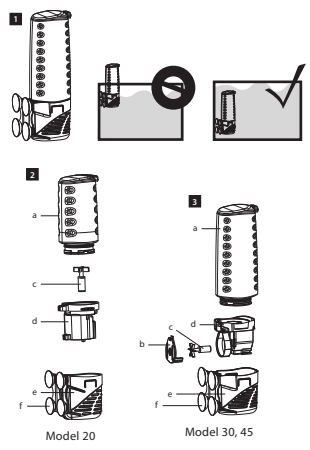

a. Filter Cartridge
b. Impeller Housing
c. Impeller
d. Motor
e. Filter Casing
f. Suction Cup

GARANTIE LIMITÉE DE 3 ANS

CDans les trois ans à compter de la date d'achat originale. Elle ne peut pas être cédée ni transférée à tout acheteur ou utilisateur subséquent.À tout moment à compter de la date d'achat originale, **Cobalt Aquatics** réparera ou remplacera, à son choix, toute chaufferette d'aquarium **Clearvue** qui présente un défaut de fabrication ou de matières premières. **Veuillez appeler au (803) 591-9500 pour obtenir l'autorisation de retourner le produit ainsi que l'adresse d'expédition.**
REMARQUE : S'assurer de bien envelopper la chaufferette pour la protéger pendant le transport. Le client est responsable des frais d'expédition après la réparation. Si le problème n'est pas couvert en vertu des modalités et conditions de la présente garantie, le client en sera informé et recevra une estimation des frais de réparation (tous les frais d'expédition étant facturés au client). Si le client refuse l'estimation, le produit sera retourné fret payable à l'arrivée. Les dommages, bris de verre ou blessures qui résultent d'une négligence ou d'une utilisation abusive ne sont pas couverts par cette garantie. La perte de poissons, les blessures et les pertes et dommages matériels qui découlent de l'utilisation de cette chaufferette ne sont pas couverts par cette garantie. Les dommages accessoires ou indirects sont expressément exclus*. Cette garantie vous confère des droits spécifiques. Vous pouvez également jouir d'autres droits qui varient selon votre lieu de résidence.

*Étant donné que certains États ne permettent pas l'exclusion des dommages accessoires ou indirects, cette exclusion peut ne pas s'appliquer dans votre cas.

COBALT AQUATICS

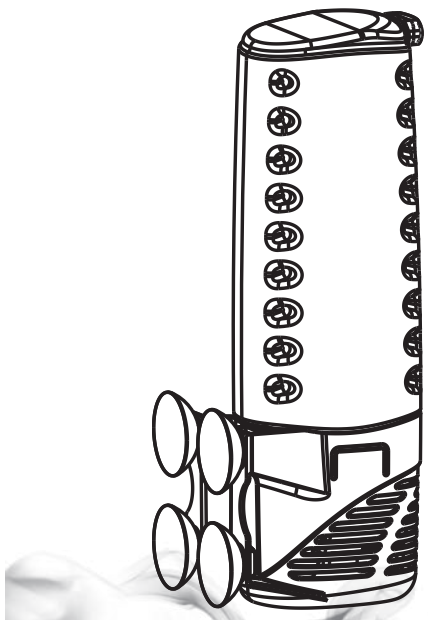

CLEARVUE

internal nano filter
Models 20, 30, 45

www.cobaltaquatics.com

WARNING:

NEVER operate a Clearvue Filter outside of the filled aquarium.
ALWAYS unplug appliance when inspecting for any reason.

09/2016

Customer Service: (803) 591-9500