Installation manual

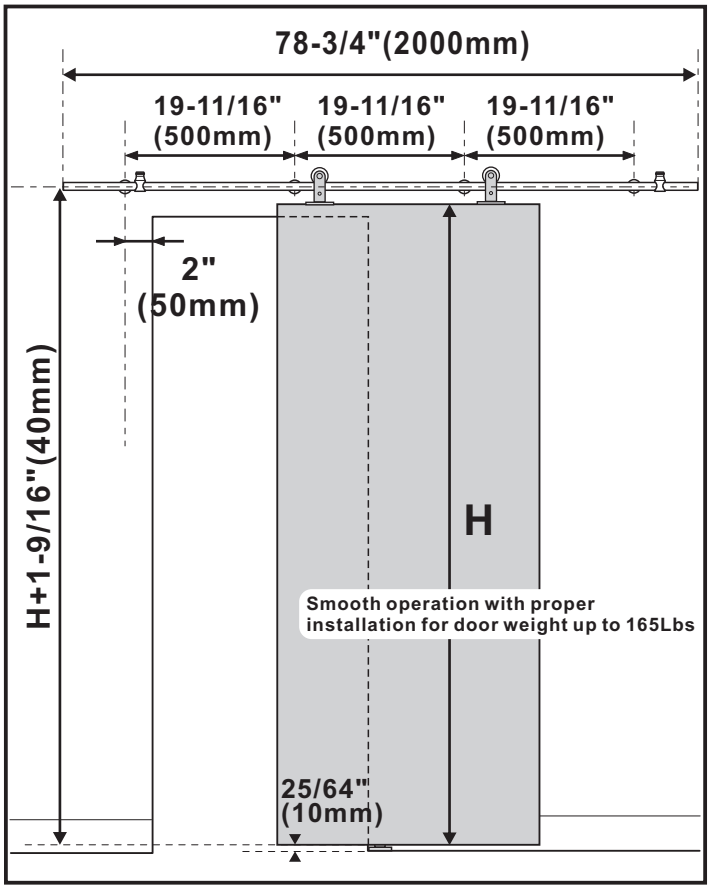

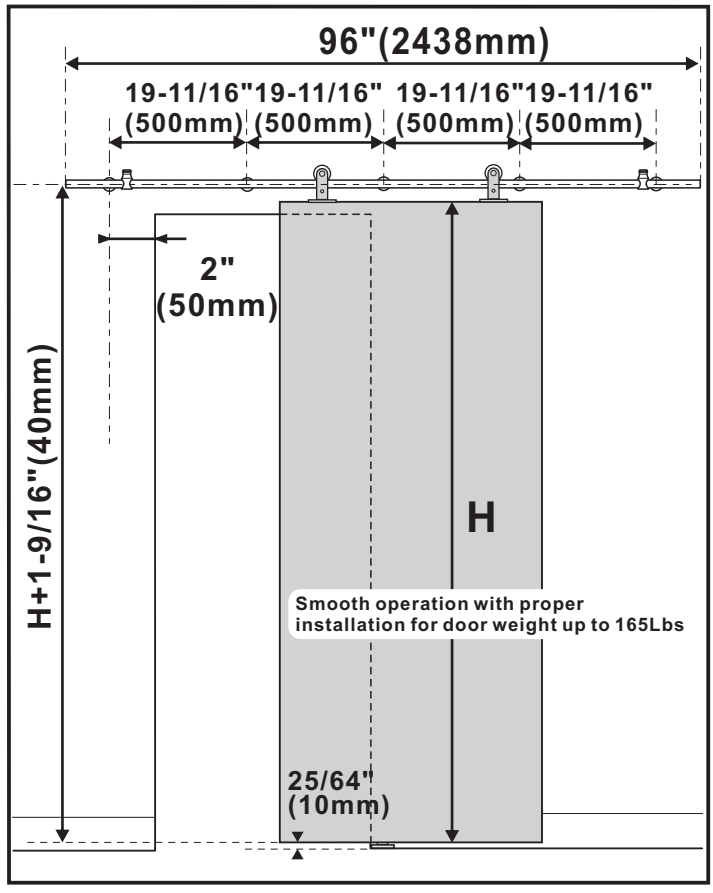

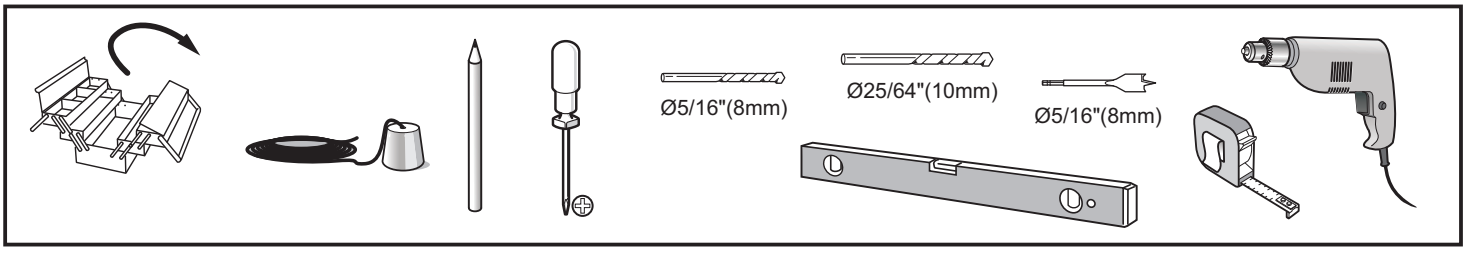

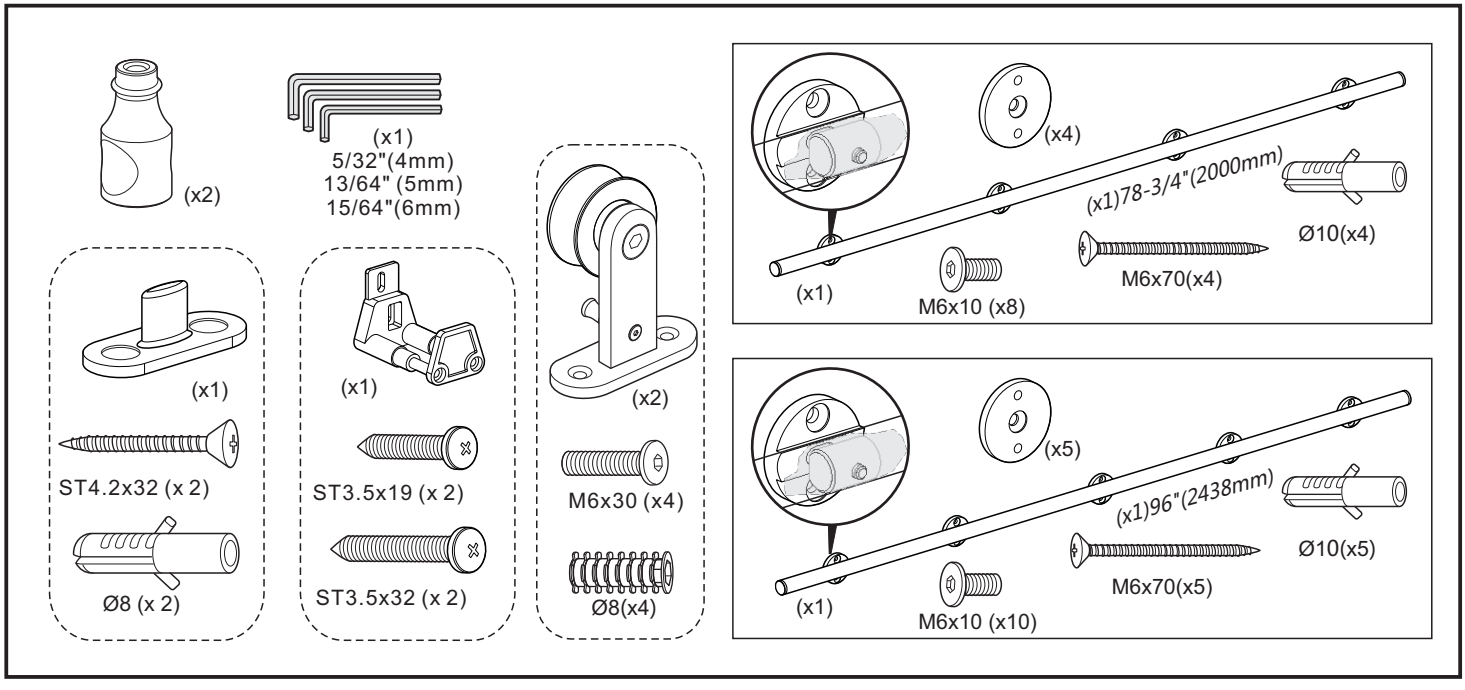

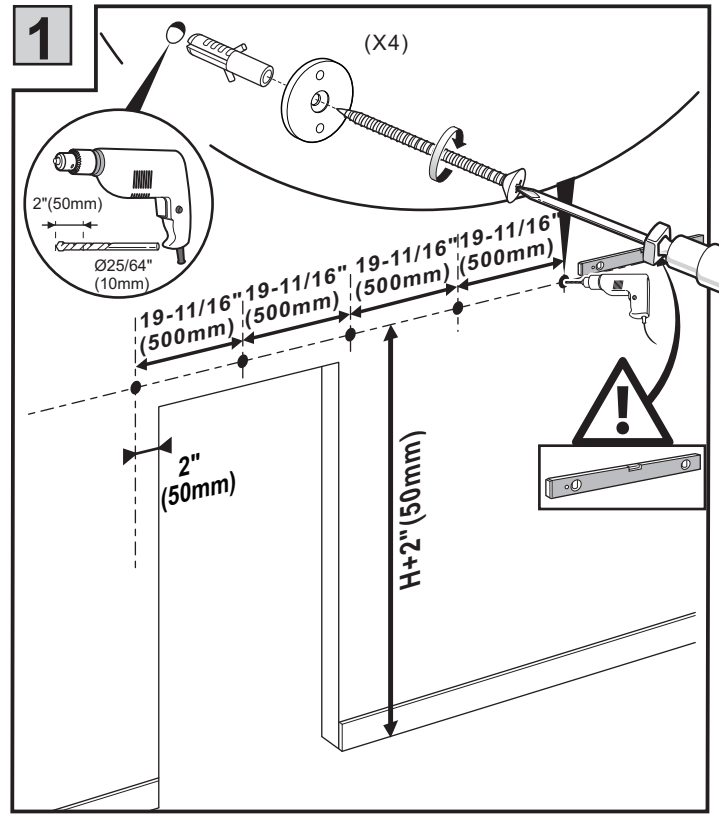
1
(X4)
2"(50mm)
Ø25/64"
(10mm)
19-11/16"
(500mm)
19-11/16"
(500mm)
19-11/16"
(500mm)
19-11/16"
(500mm)
2"
(50mm)
H+2"(50mm)

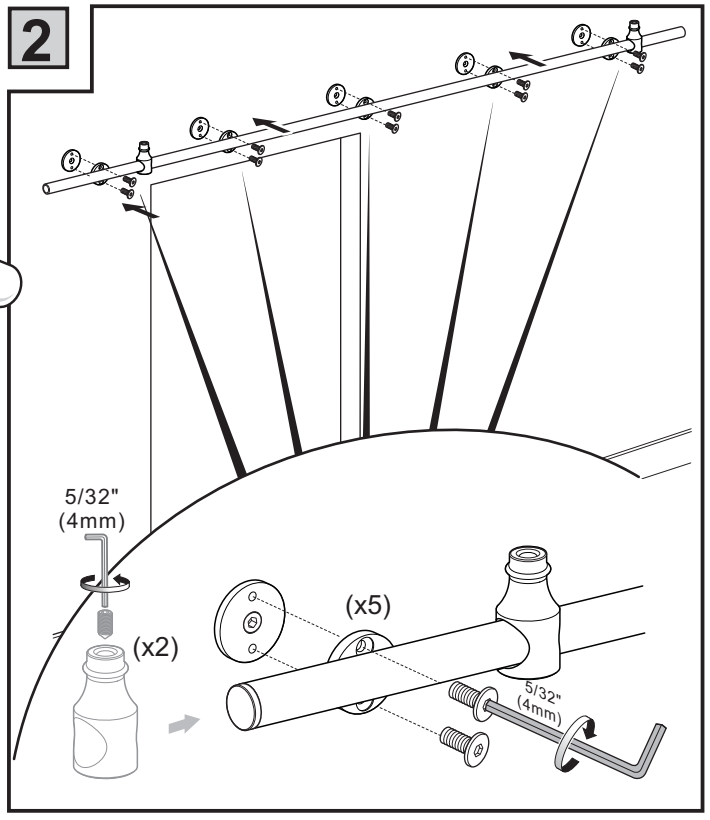
2
5/32"
(4mm)
(x2)
(x5)
5/32"
(4mm)

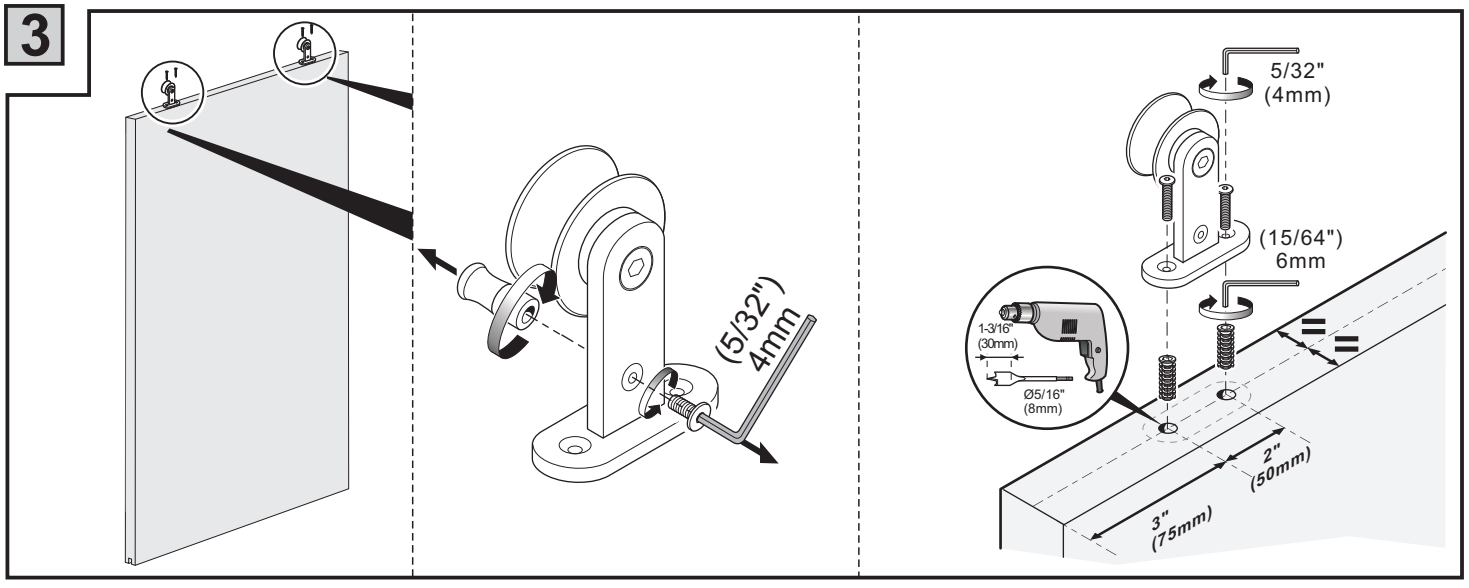
3
(5/32")
4mm
5/32"
(4mm)
(15/64")
6mm
1-3/16"
(30mm)
Ø5/16"
(8mm)
2"
(50mm)
3"
(75mm)

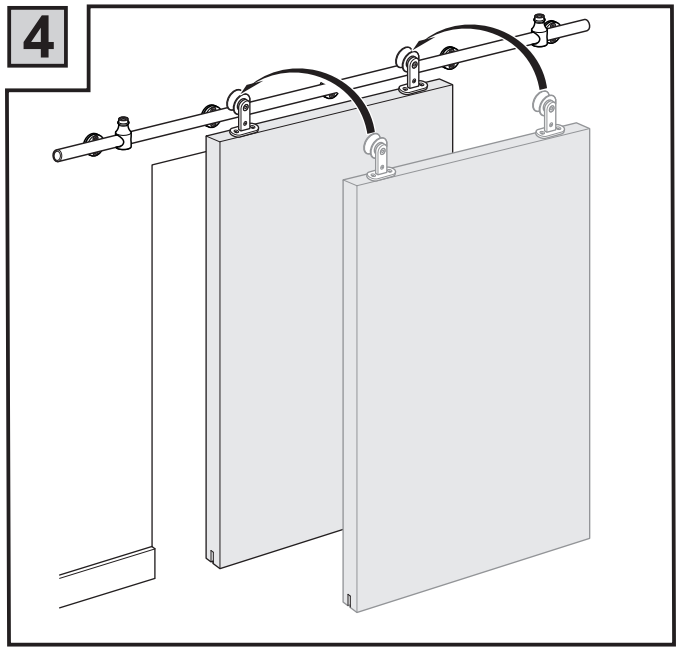
4

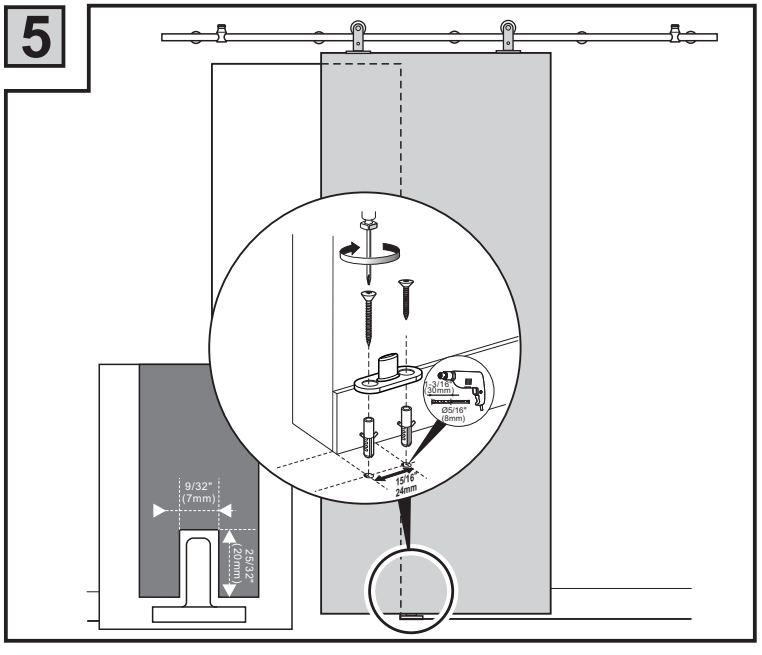
5
9/32"
(7mm)
25/32"
(20mm)
15/16"
24mm

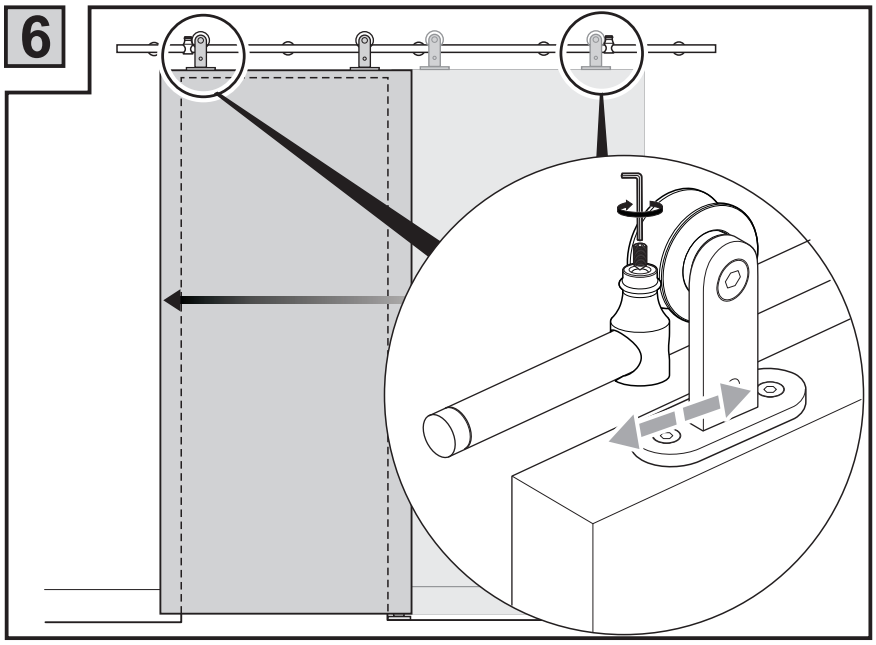
6

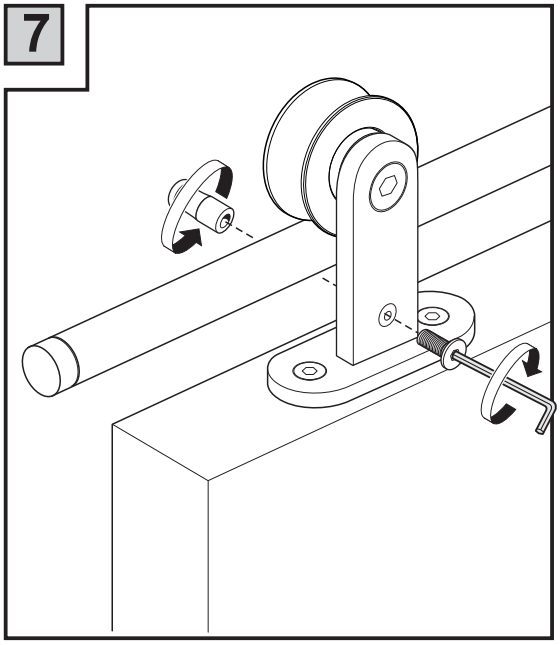
7