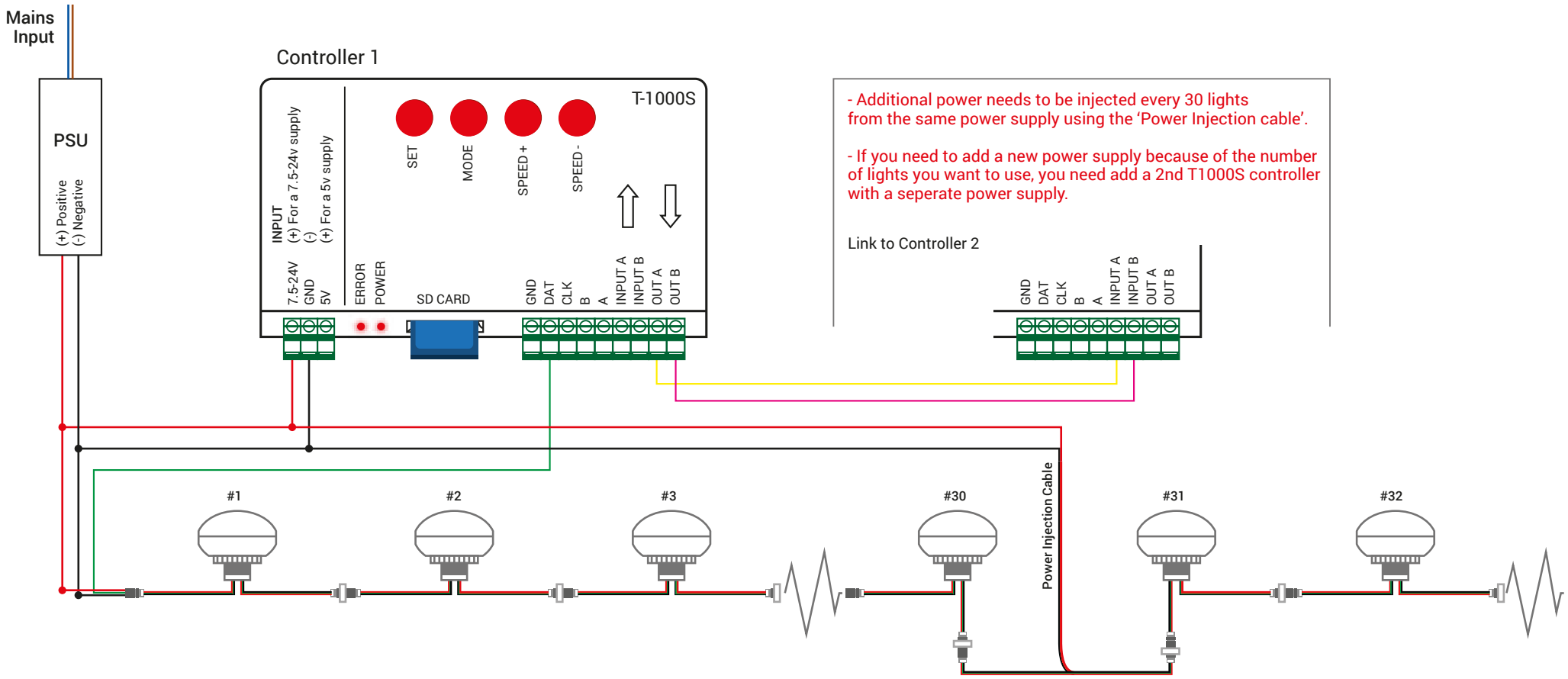T1000S Basic Wiring