# F-35 Lightning II Joint Strike Fighter

## FREEWING 1/13 SCALE 70MM EDF JET



**Wingspan:820mm** **Length:1210mm** **Empty Weight:1700G[w/o Battery]**

www.sz-freewing.com

MADE IN CHINA


| | |
|---|---|
| EN | 1~8 |
| 中 | 9~16 |

# Catalog



Introduction ..... 1
Basic Product information ..... 2
Packing list ..... 2

**PNP Assembly Instructions**

Install Vertical Stabilizer ..... 3
Install Main wing ..... 3
Install Horizontal Stabilizer ..... 3
Install Scale Accessories ..... 4
Battery ..... 4
Pushrod instructions ..... 5
Center of Gravity ..... 5
Control Direction Test ..... 6
Dual Rates and Flight Attention ..... 7
Servo Direction ..... 8
Motor Specification ..... 8

前言 ..... 9
产品基本参数 ..... 10
产品包装清单 ..... 10

**PNP组装说明**

垂尾组装 ..... 11
主翼组装 ..... 11
平尾组装 ..... 11
电池安装说明 ..... 12
仿真小配件 ..... 12
舵面控制钢丝尺寸 ..... 13
重心示意图 ..... 13
舵面测试 ..... 14
大 、小舵参数 ..... 15
舵机使用介绍 ..... 16
电机参数 ..... 16

## Introduction

Thank you for purchasing our Freewing 70 mm EDF Super Scale Jet, the F-35 Lightning II! It is 1210mm in length with a wingspan of 820mm. This 1/13 scale F35 uses EPO material. This F-35 innovates on previous versions by adding scale details with lots of engraved lines on the surface new paint and decal processes, and lots of scale plastic accessories.

All control surfaces are easily removable, and the aircraft is adequately reinforced with carbon tubes to effectively improve structural strength and ensure flight quality.

The Freewing F-35 PNP Version features a 70mm 12-blade EDF impeller, 2957-2210KV outrunner motor, and 80A ESC. The PNP version uses one 6S 4000mAh 35C battery, achieving a top speed of 165KPH / 103MPH.

The shortest takeoff distance is about 22M. The air posture is stable, easy to control, and the action is gentle. The excellent flight stability of the F-35 is very consistent with modern Freewing jets. When landing, the F-35's directional stability is good.

In addition, due to the aerodynamic design, according to our test results, at low speed, the model aircraft is prohibited from turning at a large elevation angle, which may cause a stall spin.

⚠ **NOTE:** This is not a toy. Not for children under 14 years. Young people under the age of 14 should only be permitted to operate this model under the instruction and supervision of an adult. Please keep these instructions for further reference after completing model assembly.

## Note:

1. This is not a toy! Operater should have a certain experience, beginners should operate under the guidance of professional players.
2. Before install, please read through the instructions carefully and operate strictly under instructions.
3. Cause of wrong operation,Freewing and its vendors will not be held responsible for any losses.
4. Model planes' players must be on the age of 14 years old.
5. This plane used the EPO material with surface spray paint, don' t use chemical to clean, otherwise it will damage.
6. You should be careful to avoid flying in areas such as public places,high-voltage-intensive areas,near the highway, near the airport or any other place where laws and regulation clearly prohibit.
7. You cannot fly in bad weather conditions such as thunderstorms,snows....
8. Model plane's battery, don't allowed to put in everywhere. Storage must ensure that there is no inflammable and explosive materials in the round of 2M range.
9. Damaged or scrap battery should be properly recycled, it can't discard to avoid spontaneous combustion and fire.
10. In flying field, the waste after flying should be properly handled,it can't be abandoned or burned.
11. In any case, you must ensure that the throttle is in the low position and transmitter switch on, then it can connect the lipo-battery in aircraft.
12. Do not try to take planes by hand when flying or slow landing process. You must wait for landing stop, then carry it.

## Product basic information

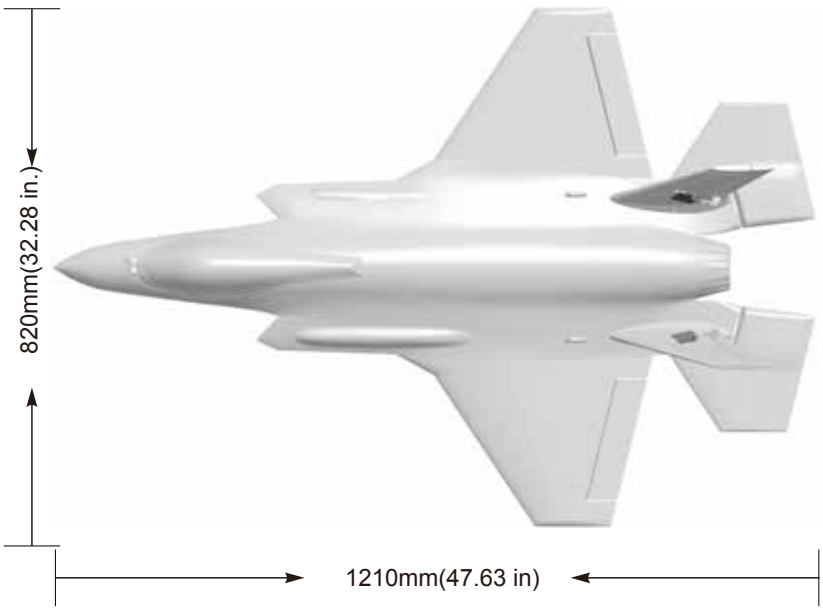


### Standard Version

Wingload: 163g/dm²
Wing Area: 14 dm2
Motor: 2957-2210KV I/R Motor
Servo: 9g MG Digital servo (7pcs)
ESC: 80A with 5A UBEC
Ducted fan: 70mm 12-blade fan
Weight: 1700g (w/o Battery)
Thrust: 2600g

### Other Features

Material: EPO
Aileron: Yes Flaps: Yes
Elevator: Yes Rudder: Yes
Landing gear:Retract landing gear controlled by electric worm
Scale Pilot figure (1pcs)
LiPo Battery: 6S 3500-4500mAh (1pcs)

⚠ Note: The parameters in here are derived from test result using our accessories. If use other accessories, the test result will be different. Any problem since of using other accessories, we are not able to provide technical support.

## Package list

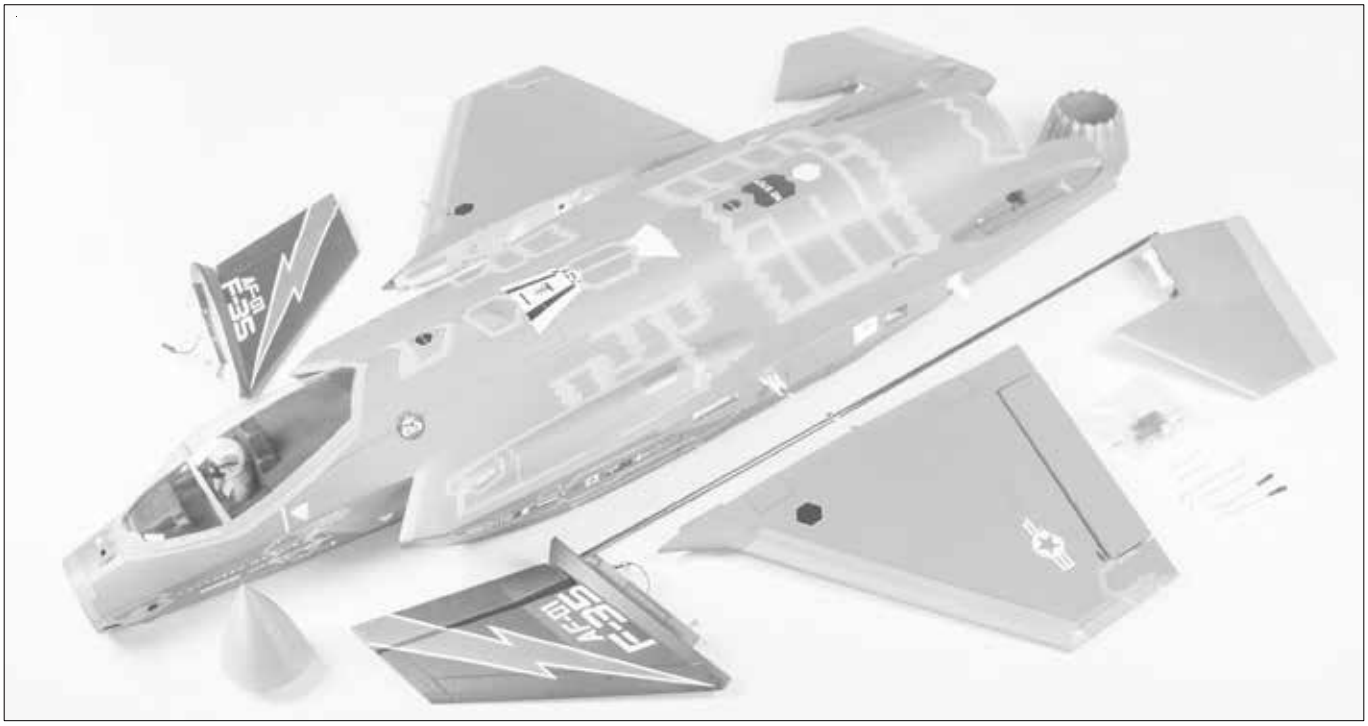

**Different equipment include different spareparts. Please refer to the following contents to check your sparepart list.**

| No. | Name | PNP | ARF Plus | Airframe |
|---|---|---|---|---|
| 1 | Fuselage | Pre-installed all electronic parts | Pre-installed servo | No electronic equipment |
| 2 | Main wing | Pre-installed all electronic parts | Pre-installed servo | No electronic equipment |
| 3 | Horizontal tail | Pre-installed all electronic parts | Pre-installed servo | No electronic equipment |
| 4 | Vertical tail | Pre-installed all electronic parts | Pre-installed servo | No electronic equipment |
| 5 | Drop tank | √ | √ | √ |

| No. | Name | PNP | ARF Plus | Airframe |
|---|---|---|---|---|
| 6 | Carbon tube | √ | √ | √ |
| 7 | Pushrod instructions | √ | √ | √ |
| 8 | Non-slip mat & Glue | √ | √ | √ |
| 9 | Manual | √ | √ | √ |
| 10 | Screw | √ | √ | √ |

## Install Vertical Stabilizer

Step1

As the photo show:
1.Connect the rudder cable with fuselage extension wire, and install the left/right vertical stabilizer.
2.Use 4pcs screws to fix the vertical stabilizer.

A-Rudder
B-Rudder servo cable
C-Screw ( FA3x8mm 4pcs )

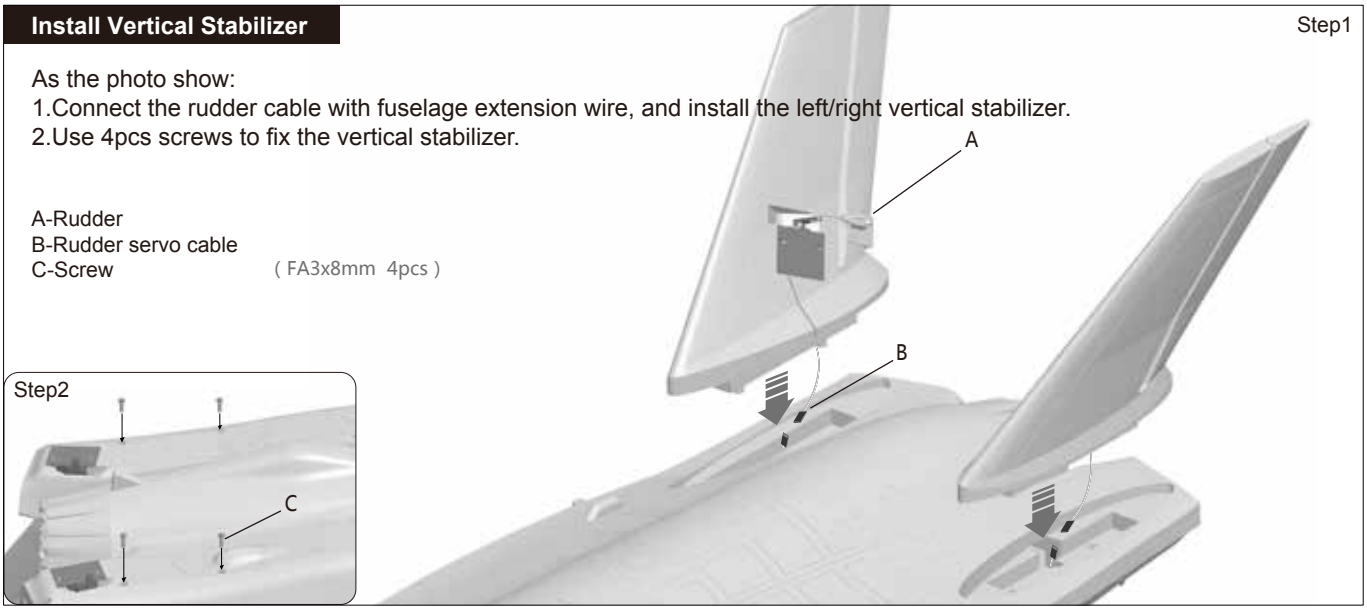


## Install Main Wing

Step1

As the photo show:
1.Insert the carbon tube to two side of fuselage and connect the wing servo cable with fuselage extension wire.
2.Install left/right main wing and use screws to fix.

A-Carbon tube ( Ø6x680mm 1pcs )
B-Wing servo cable
C-Screw ( PWA3x8mm 4pcs )

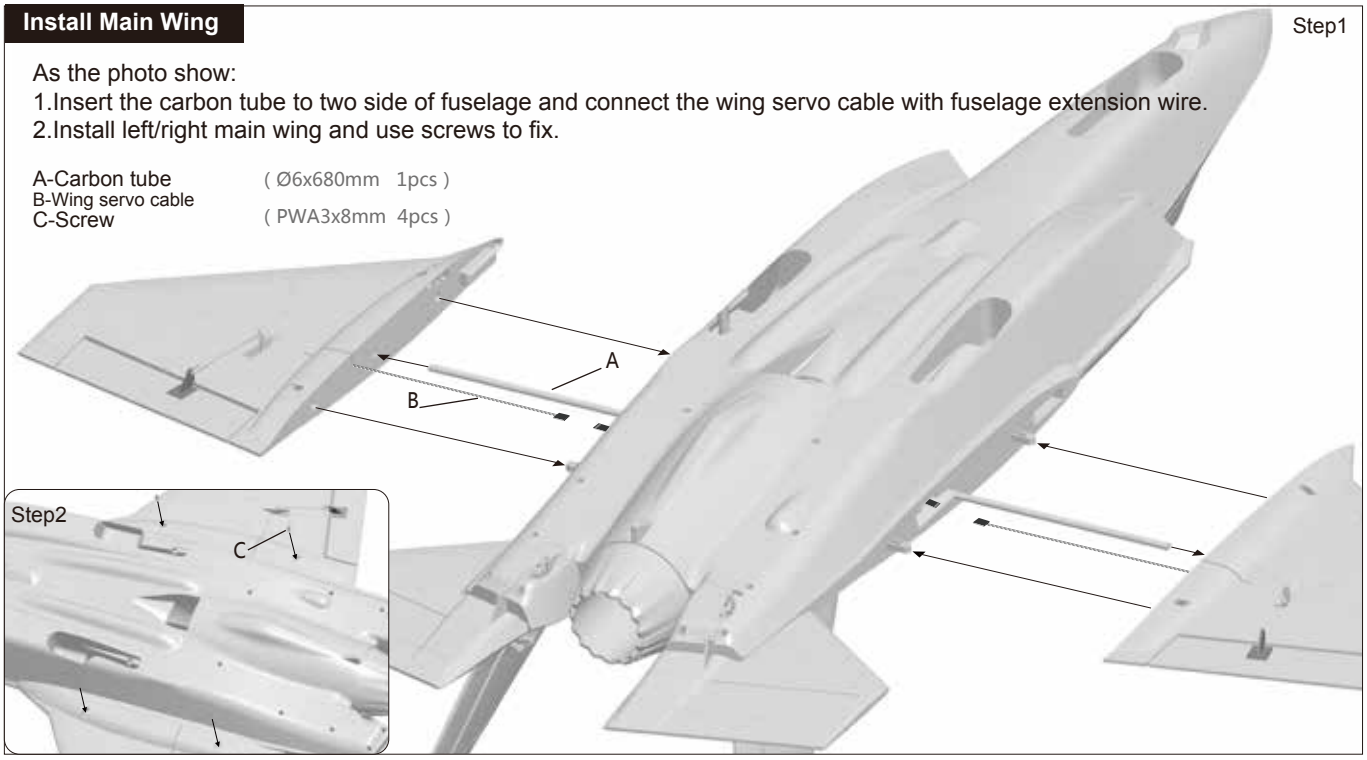


## Install Horizontal Stabilizer

As the photo show:
1.Insert the transfer plastic parts of left/right horizontal stabilizer to the tail of fuselage.
2.Center the elevator and use 4pcs screws to fix.

A-Horizontal Stabilizer
B-Transfer plastic parts
C-Screw (FA3x8mm 4pcs)

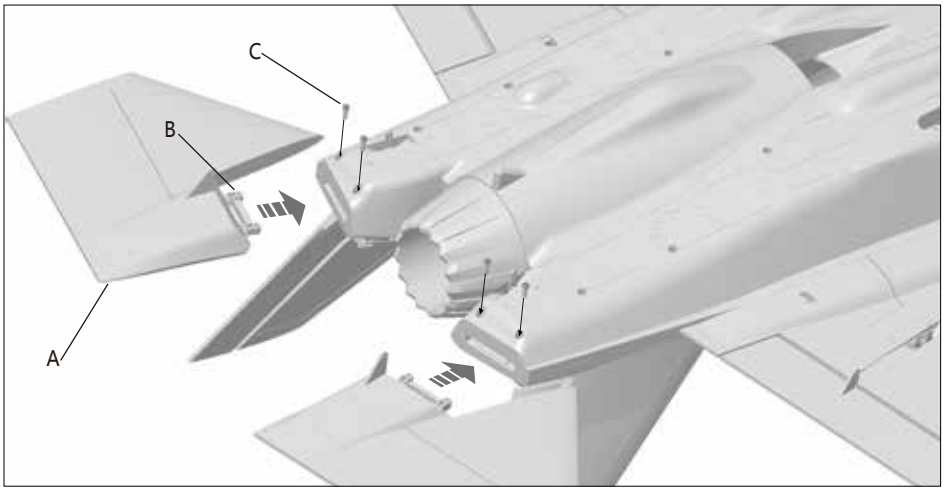

As the photo show:
Use elevator pushrod to connect the servo arm and elevator arm

A-elevator
B-elevator pushrod ( 2pcs )
C-servo arm

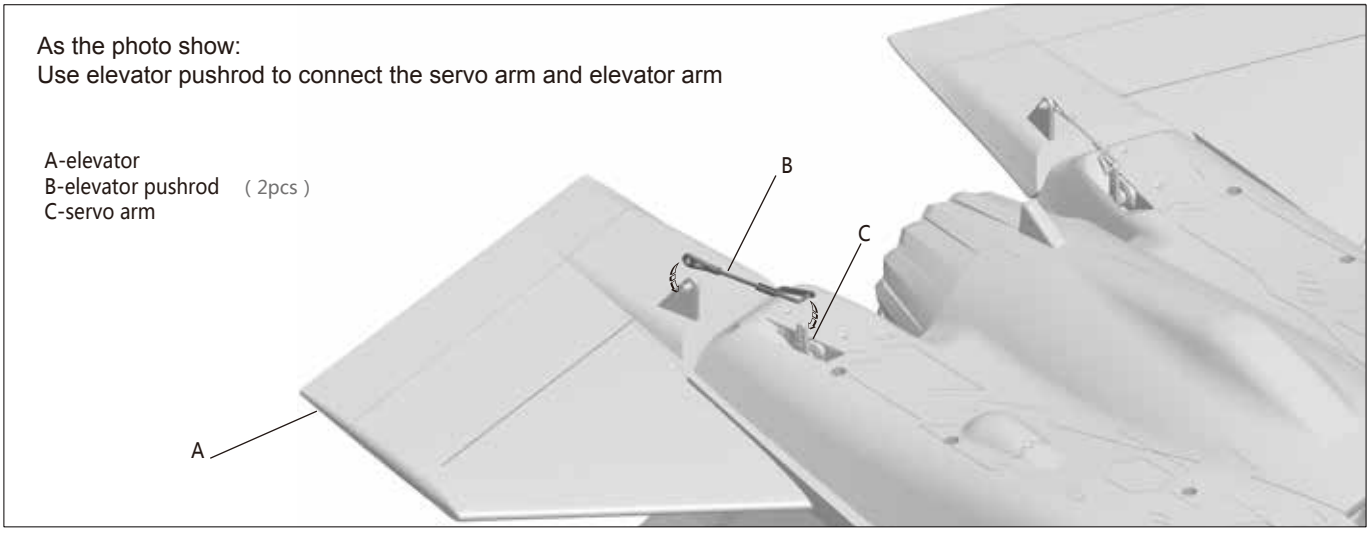


## Battery Size

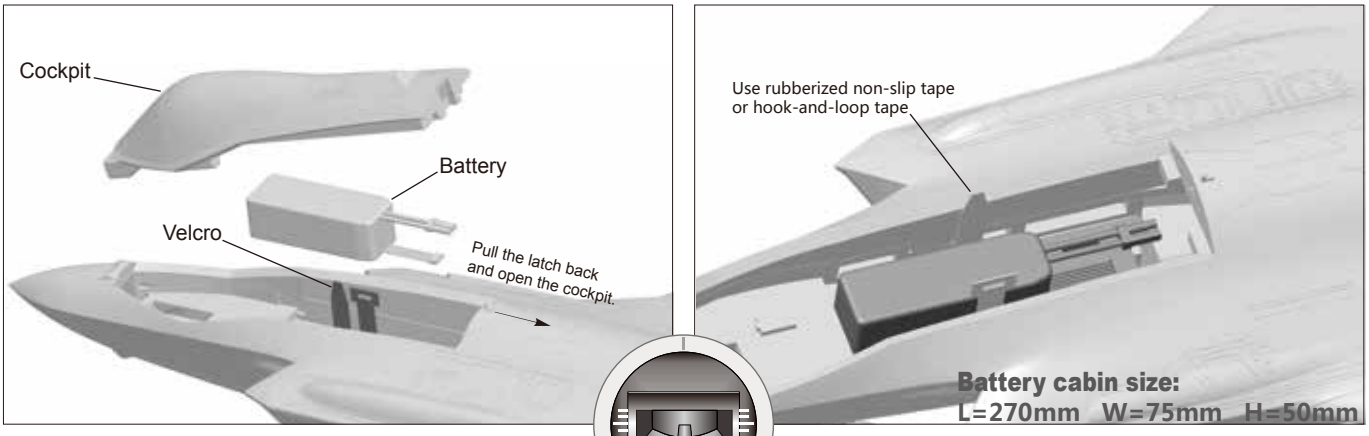


Before connecting the battery and receiver, please switch on the transmitter power and make sure the throttle stick is in the lowest position. Bind your receiver to your transmitter according to your transmitter's instruction manual.

We recommend the following LiPo battery:
**6S22.2V 3500mAh~6S22.2V 4500mAh**
Discharge rate of C ≥ **30C**

## Install Nose Cone

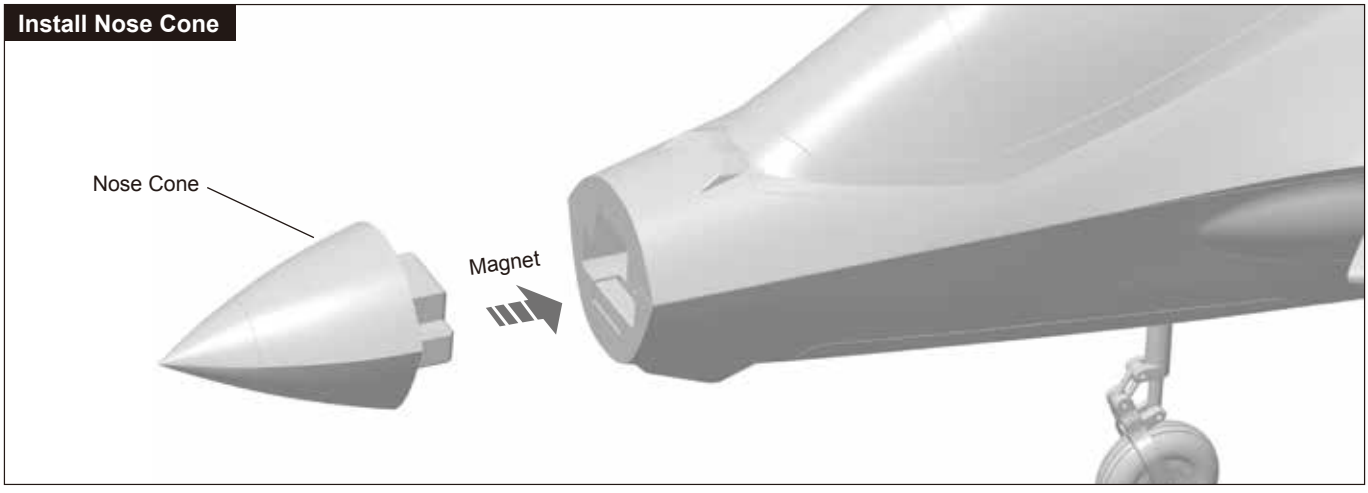

## Pushrod instructions

**Nose gear steering pushrod length**

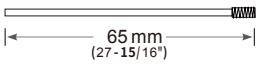


Pushrod diameter Ø1.2mm

**Nose gear steering pushrod mounting hole**

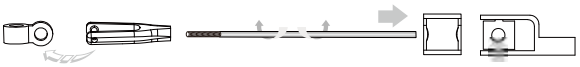

**Rudder pushrod length**

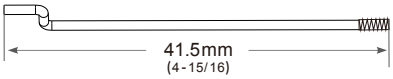


Pushrod diameter Ø1.2mm

**Rudder pushrod mounting hole**

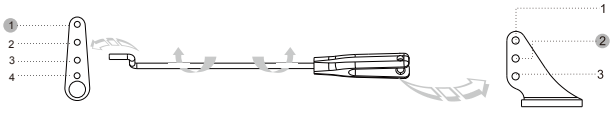


**Elevator pushrod length**


Pushrod diameter Ø1.2mm

**Elevator pushrod mounting hole**

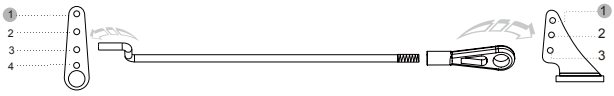


**Aileron pushrod length**

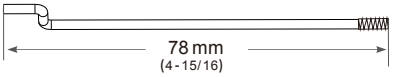


Pushrod diameter Ø1.2mm

**Aileron pushrod mounting hole**

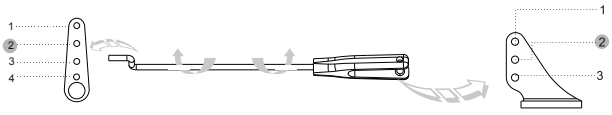


## Center Of Gravity

Correct Center of Gravity (”CG”) is critical for enabling safe aircraft stability and responsive control. Please refer to the following CG diagram to adjust your aircraft’s Center of Gravity.

- Depending on the capacity and weight of your choosen flight batteries, move the battery forward or backward to adjust the Center of Gravity.
- If you cannot obtain the recommended CG by moving the battery to a suitable location, you can also install a counterweight to achieve correct CG. However, with the recommended battery size, a counterweight is not required. We recommend flying without unnecessary counterweight.

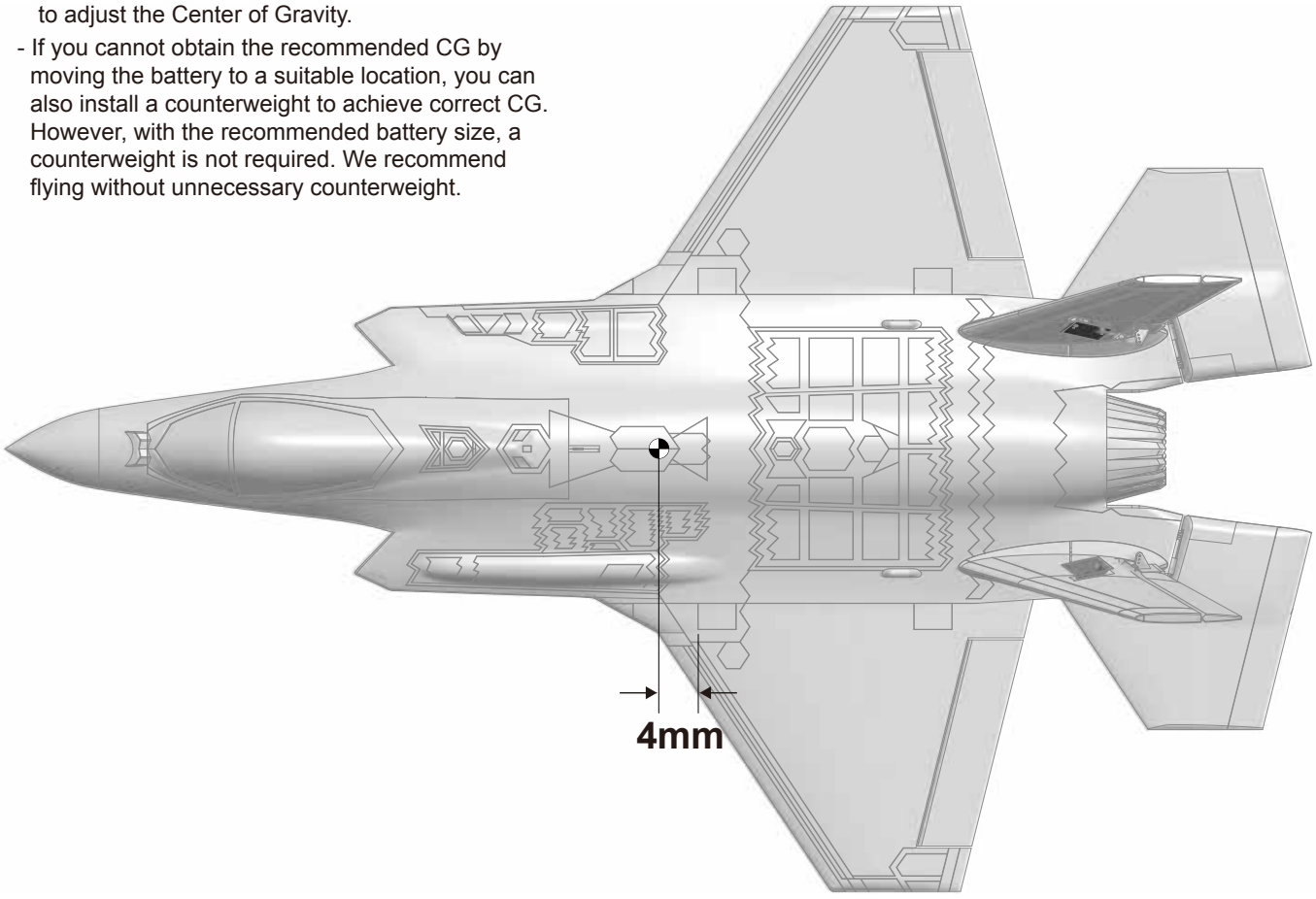

## Control Direction Test

After installed the plane, before flying, we need a fully charged battery and connect to the ESC, then use radio to test and check that every control surface work properly.

## Aileron

**Stick Left**

**Stick Right**

## Rudder

**Stick Left**

**Stick Right**

## Elevator

**Stick Up**

**Stick down**

## Dual Rates

According to our testing experience, use the following parameters to set Aileron/Elevator Rate. Program your preferred Exponential % in your radio transmitter. We recommend using High Rate for the first flight, and switching to Low Rate if you desire a lower sensitivity. On successive flights, adjust the Rates and Expo to suit your preference.

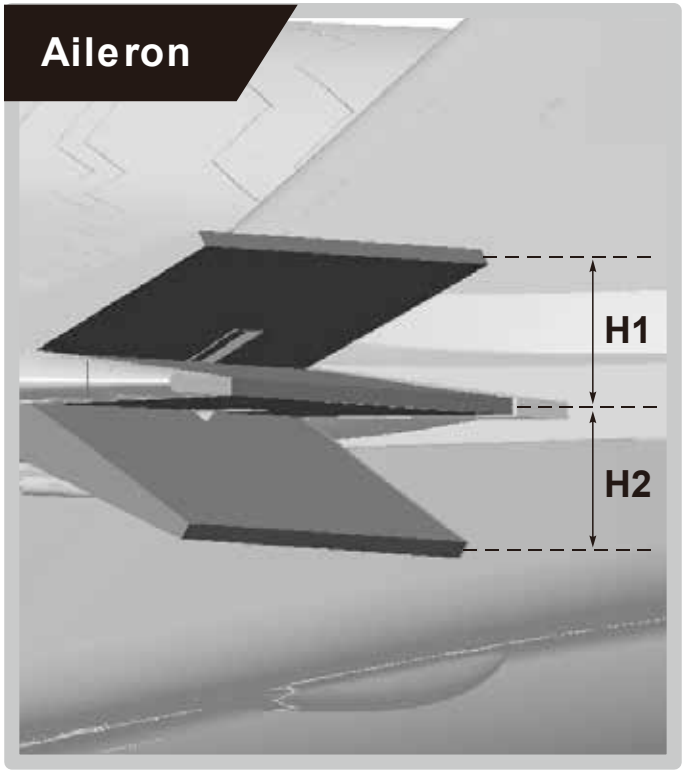


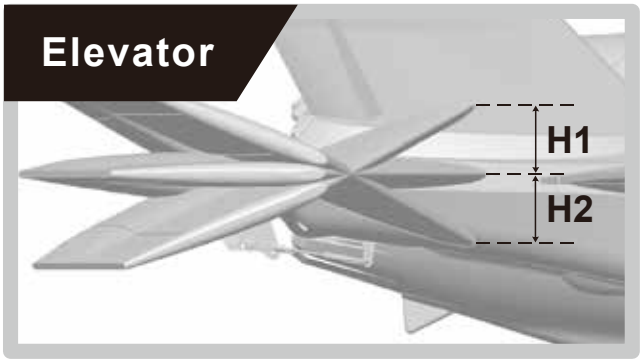


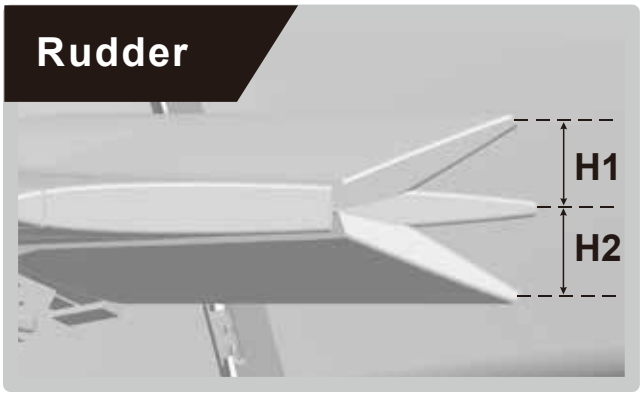


| | Aileron (Measured closest to fuselage) | Elevator (Measured closest to fuselage) | Rudder (Measured from the bottom) |
|---|---|---|---|
| **Low Rate** | H1/H2 14mm/ 14mm<br>D/R Rate: 60% | H1/H2 21mm/ 21mm<br>D/R Rate: 80% | H1/H2 13mm/ 13mm<br>D/R Rate: 80% |
| **High Rate** | H1/H2 18mm/ 18mm<br>D/R Rate: 80% | H1/H2 25mm/ 25mm<br>D/R Rate: 100% | H1/H2 15mm/ 15mm<br>D/R Rate: 100% |

## ⚠ Important Flight Notes:

Elevator center position, please refer to the following:

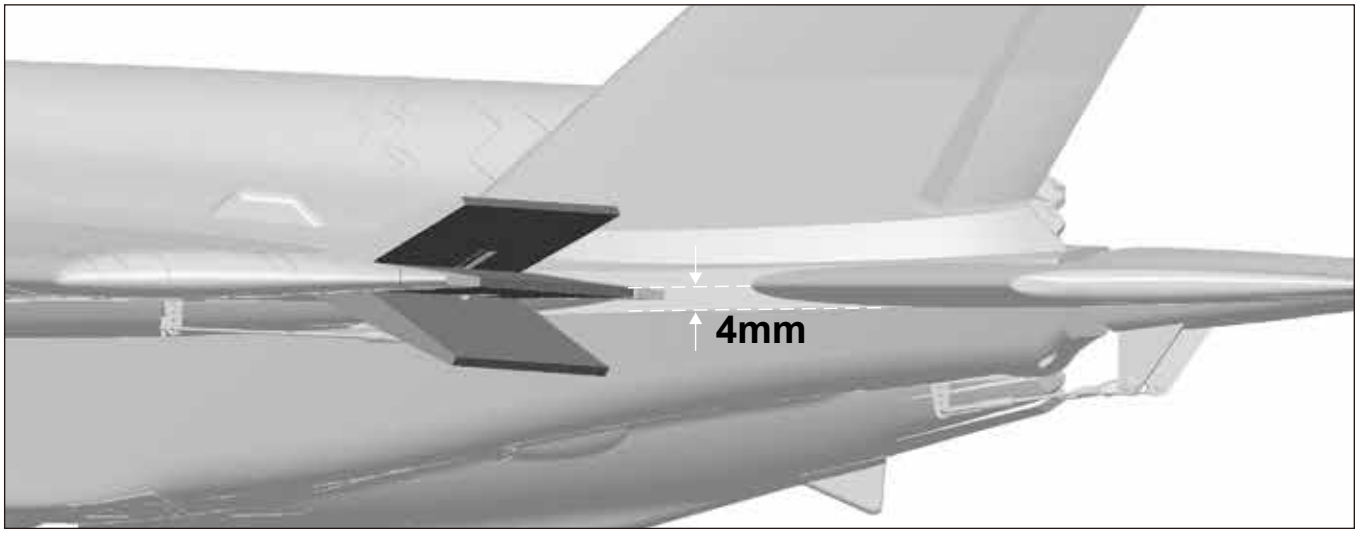

# Pre-Installed Component Overview

## Servo Direction

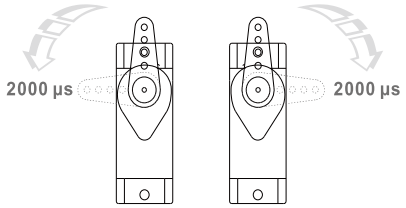


The servo positive or reverse rotation is defined as follows:
When servo input signal change from 1000μs to 2000μs,
The servo arm is
**rotated clockwise**, its **positive servo.**
The servo arm is
**rotated counterclockwise**, its **reverse servo.**

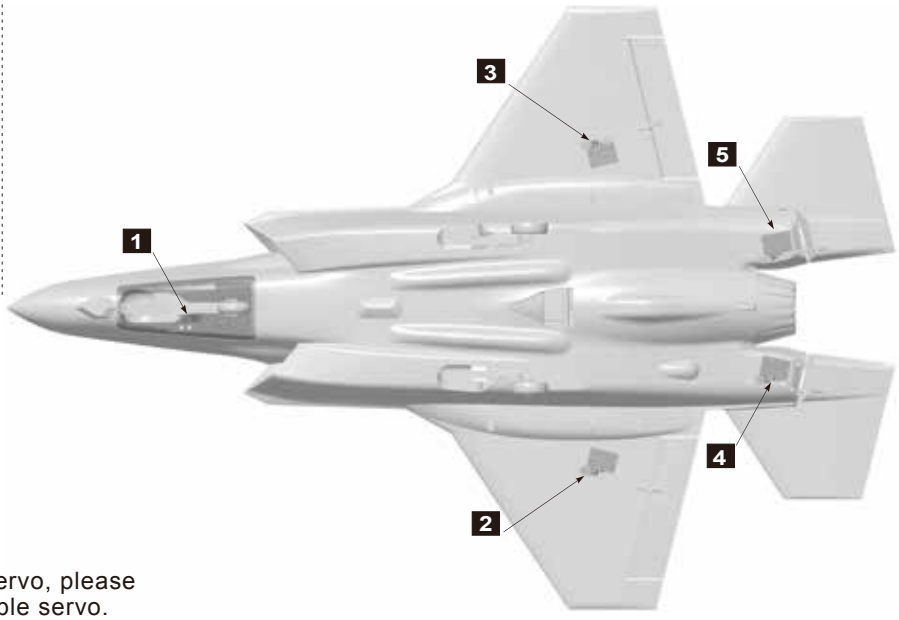


If you need to purchase another brand's servo, please refer to the following list to choose a suitable servo.

| Position | Servo regulation | No. | Pos./Rev. | Cable length |
|---|---|---|---|---|
| Nose gear steering servo | 9g Digital-MG | 1 | Positive | 100mm |
| Aileron(R) | 9g Digital-MG | 2 | Positive | 100mm |
| Aileron(L) | 9g Digital-MG | 3 | Positive | 100mm |
| Elevator(R) | 9g Digital-MG | 4 | Positive | 100mm |
| Elevator(L) | 9g Digital-MG | 5 | Positive | 100mm |
| Rudder(R) | 9g Digital-MG | 6 | Positive | 100mm |
| Rudder(L) | 9g Digital-MG | 7 | Positive | 100mm |

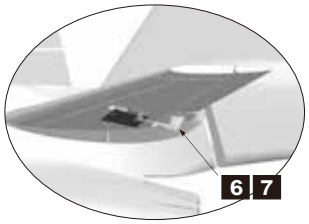


## Motor Specification

Item No.MI036582
2957-2210KV

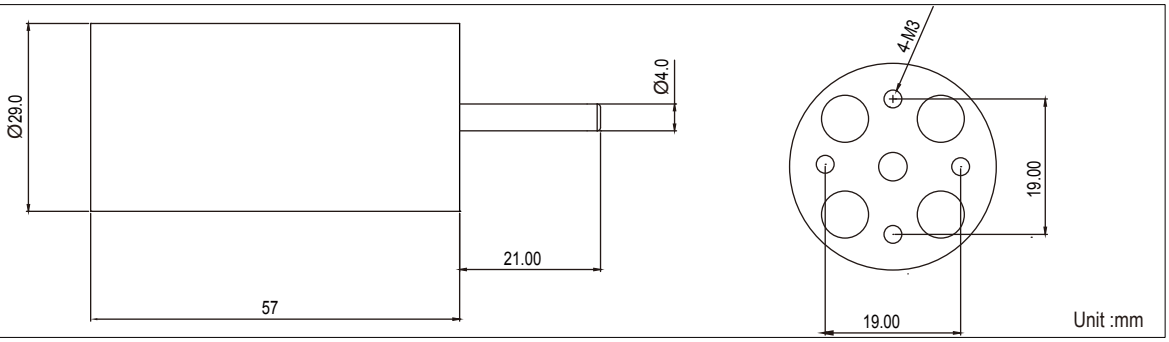


| Item No. | Motor size | Motor(KV) | Thrust(g) | Current(A) | Use voltage (V) | Use ESC (A) | EDF Weight (g) | Max power (W) | Efficiency (g/w) |
|---|---|---|---|---|---|---|---|---|---|
| E72311 | 2957-2210KV | 2210KV | 2600 | 70 | 22.2（6S） | 80 | 240 | 1550 | 1.68 |