ROBAN

INSTRUCTION MANUAL

800 size UH-1N

KIT

Item No.: RCH-UH1Nxx8
October 2023
Version 1.01

ROBAN

DISCLAIMER

All instructions, warranties and other collateral documents are subject to change at the sole discretion of Roban Model Limited. For up-to-date product literature, visit robanmodel.com and click on the support or tab for this product.

Roban Model Limited, No. 28, 2nd Industrial Zone, Liuchongwei, Wanjiang, Dongguan, China
+86 134 234 61078 www.robanmodel.com sales@robanmodel.com

ROBAN

Contents

ROBAN

1 PREFACE

1.1 Warning

Please exercise caution and read the entire instruction manual before operating this product. Familiarize yourself with all features of the product to ensure correct and safe usage. Incorrect operation of the product can lead to damage to the product and personal property, as well as cause serious injury. This product requires basic mechanical ability and should be operated with caution and common sense. The improper use of this product could result in injury or damage to the product or other property. Children should not use this product without direct adult supervision. Do not use with incompatible components or alter the product in any way beyond the instructions provided by Roban Model Limited. The instruction manual includes important information regarding safety, operation, and maintenance. It is imperative to thoroughly read and follow all instructions and warnings in the manual before assembly, setup, or usage to prevent any damage or serious injury.

1.2 Flight Safety Advisory

Roban Model is dedicated to provide its users with a secure and enjoyable flying experience. A comprehensive understanding of flight safety is imperative for safeguarding both personal and environmental safety.

To ensure safety, it is recommended to fly in open spaces that are clear of obstructions such as buildings, trees, high voltage power lines, crowds, water surfaces, and other obstacles.

To always maintain control of the helicopter, it is recommended to keep the remote-control transmitter within reach, even when utilizing the Auto Flight, Auto Landing, or Auto Return Home functions.

To ensure flight safety, it is imperative to always keep the helicopter within visual range.

For the safety of all involved, it is advised to not fly the helicopter higher than 120 meters above the ground. If there are any local regulations regarding flying height, or if the restrictions are lower than 120 meters, these regulations should be followed.

Please be aware that the product is delicate, with fiberglass parts that may crack due to shrinkage, temperature, and transportation. We cannot be held responsible for any issues arising after delivery. Please review terms and conditions before purchasing.

2 Description of the product

2.1 Purpose of the product

The Roban Model Limited remote controlled scale helicopter is a sophisticated hobby product designed for use by experienced hobbyists. The helicopter features a CCPM scale mechanic that requires in-depth knowledge to operate. The product is intended for individuals with a advanced understanding of mechanical systems and a cautionary approach to operating remote controlled devices.

The purpose of this product is to provide an enjoyable hobby experience while also requiring a certain level of skill and caution. The helicopter should only be operated by individuals over the age of 18, or under the direct supervision of an adult above the age of 14 years. It is important to thoroughly read the instruction manual and become familiar with the product's features before attempting to operate. Proper use and maintenance will ensure safe and efficient operation, avoiding damage to the product, personal property, or causing injury.

2.2 Technical data

Parameter	Unit
Size, weight	1730*360*500mm, 14.5kg TOW
Main and tail rotor diameter	1700mm (760*60), 280mm
Motors	(412) 450KV / (212) 530KV 12S 44.4V
ESC	1*120A 12S 44.4V BLDC
Battery	44.4 12S 5000mAh LIPO (required, optional)
Radio Control	Min 6ch with 120°CCPM mixing, pitch and throttle curves
Flight controller	3 axis 3D and scale compatible “flybarless”
Servos Swashplate	3x 700 size 40g type, brushless metal geared (5kgcm +)
Servos Tail	1x 700 size 40g type, brushless metal geared (8kgcm +)

Table 1 specifications

2.3 Product Compliance

EU Compliance Statement:
800 size B412 (B412-8);
800 size B212 (B212-8);

Hereby, Roban Model Limited declares that the device is in compliance with the following: EU Low Voltage Directive 2014/35/EU, EU EMC Directive 2014/30/EU , RoHS 2 Directive 2011/65/EU, RoHS 3 Directive -Amending 2011/65/EU Annex II 2015/863

WEEE NOTICE: This appliance is labeled in accordance with European Directive 2012/19/EU concerning waste of electrical and electronic equipment (WEEE). This label indicates that this product should not be disposed of with household waste. It should be deposited at an appropriate facility to enable recovery and recycling. EU Manufacturer of Record: Roban Model Limited, Wanjiang, Dongguan, PR China

2.4 Product components / Contents

1 – Main Frame 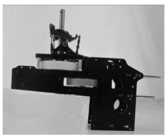	2 – Tail rotor assy 	3 – Main rotor head (412) 	4 – Tail servo holder 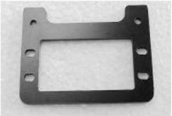
5 – Motor pulley 	6 – Tail boom clamp 	7 – Ball links x12 	8 – Tail servo holder 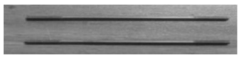
9 – Main rotor blades 	10 – Tail rotor blades 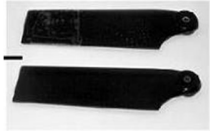	11 – Scale parts A x2 	12 – Wire cutter 
13 – Scale part B x2 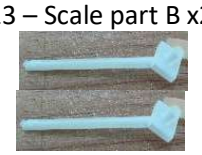	14 – Scale part C 	15 – Pushrod holder x3 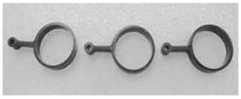	16 – Tail pushrod 702mm 
17 – Tail tube 794mm 	18 – Torque tube 824mm 	19 – Tail boom support x2 	20 – Short tail tube 
21 – Torque tube 269mm 	22 – Tail Pushrod 264mm 	23 – Torque tube holder x2 	24 – Tail gearbox 
25 – Tail servo clamp x2 	26 – L brackets x4 	27 – Washer M3 x8 	28 – Washer M4 x4 
29 – Screw M4x10 x4 	30 – Screw M3x16 x4 	31 – Screw M3x10 x6 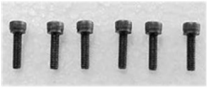	32 – Ball link x4 

33 – Nut M2 x4 	34 – Nut M3 x4 	35 – Screw M3x10 x3 	36 – Motor pinion support x3 
37 – Pinion bearing block 	38 – Screw A3x25 x4 	39 – Screw A2x8 x2 	40 – Screw A2x6 x10 
41 – Wooden washers x6 	42 – Front window 	43 – Tail Wing set 	44 – Tail skid 
45 – Scale Part x2 	46 – Scale Part x2 	47 – Scale Part 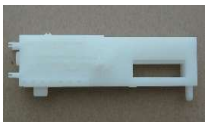	48 – Scale Part 
49 – Scale Part 	50 – Scale Part 	51 – Scale part 	52 – Scale Part 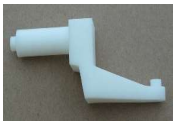
53 – Front window 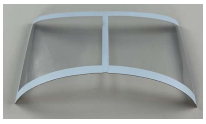	54 – Landing gear 	55 – Landing gear 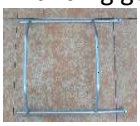	56 – White light x2 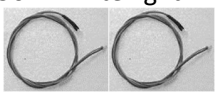
57 – Red light with socket 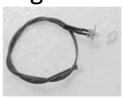	58 – Green light with socket 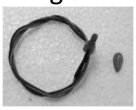	59 – Red light 	60 – Prolonging wire x4 
61 – LED controller 	62 – LED controller 	63 – Instrument panel 	64 – Center console 
65 – Lateral backseat x2 	66 – Backseat row 	67 – Front seat x2 	68 – Cyclic sticks x2 

69 – Scale part x2 	70 – Scale part x2 	71 – Scale part x2 	72 – Scale part x2 
73 – cockpit light connector wire 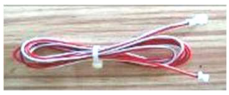	74 – Decal set 	75 – Scale part x2 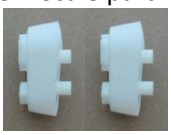	77 - Scale part 
78 – Scale part 	78 – Scale part 	78 – Scale part 	78 – Scale part 

2.5 ADDITIONAL COMPONENTS REQUIRED

- Electric Motor: 12S – 450KV/530KV 750MX, or similar, pinion shaft diameter 6mm
  450KV for 4 blade 412 versions, 530KV for 2 blade 212 versions
- Speed controller: minimum 120A to be safe.
- Batteries: 10-12S 4000-5000mAh
- 1 flybarless 3 axis control unit, suitable for scale flying
- Radio power system
- 3 cyclic servos
- 1 tail rotor servo
- 6 channel radio control system 2.4 GHz

2.6 TOOLS, LUBRICANTS, ADHESIVES

- Generic pliers and Servo pliers
- Hexagonal driver, as needed
- 5.5mm Socket wrench (for M3 nuts)
- 8mm Hex fork wrench (for M5 nuts)
- Medium thread locker (e.g., Loctite 243)
- Strong retaining compound (e.g., Loctite 648)
- Spray lubricant (e.g., Try-Flow Oil)
- Synthetic grease (e.g., Tri-Flow Synthetic Grease)
- Cyanoacrylate adhesive, Epoxied adhesive
- Pitch Gauge (for set-up)
- Soldering equipment, bullet plugs, and heat shrink tubes (for motor wiring)
- Double sided foam tape, cable zip ties, sticky Velcro straps

2.7 Packaging groups

1	Landing gear
2	Fuselage
3	Tail boom fuselage
4	Scale parts, cockpit, tail wings, accessories
5	Mechanics, rotor head, accesories
6	Fenestron unit, preassembled
7	Main blades, tail boom and tail shafts

Table 2 Box contents

Fig. 2 Box contents

w

3 Safety instructions

Please note that this product is not intended to be used as a toy. The rotor blade tips can achieve speeds exceeding 500km/h during flight and can cause significant damage or injury to objects, animals, or people. Additionally, in the event of a malfunction, an uncontrolled descent could occur, resulting in the product falling out of the sky uncontrollably. As such, it is imperative that the product be operated only in open and uninhabited areas and not over any populated or inhabited areas.

3.1 Explanation of safety warnings

WARNING: Procedures, which if not properly followed, create the probability of property damage, collateral damage, and serious injury OR create a high probability of superficial injury.

CAUTION: Procedures, which if not properly followed, create the probability of physical property damage AND a possibility of serious injury.

NOTICE: Procedures, which if not properly followed, create a possibility of physical property damage AND a little or no possibility of injury.

3.2 Safety Precautions and Warnings

• Always keep a safe distance in all directions around your model to avoid collisions or injury. This model is controlled by a radio signal subject to interference from many sources outside your control. Interference can cause momentary loss of control.
• Always operate your model in open spaces away from full-size vehicles, traffic and people.
• Always carefully follow the directions and warnings for this and any optional support equipment (chargers, rechargeable battery packs, etc.).
• Always keep all chemicals, small parts and anything electrical out of the reach of children.
• Always avoid water exposure to all equipment not specifically designed and protected for this purpose. Moisture causes damage to electronics.
• Never place any portion of the model in your mouth as it could cause serious injury or even death.
• Never operate your model with low transmitter batteries.
• Always keep aircraft in sight and under control.
• Always move the throttle fully down at rotor strike.
• Always use fully charged batteries.
• Always keep transmitter powered on while aircraft is powered.
• Always remove batteries before disassembly.
• Always keep moving parts clean.
• Always keep parts dry.
• Always let parts cool after use before touching.
• Always remove batteries after use.
• Never operate aircraft with damaged wiring.
• Never touch moving parts.

4 Preparation

4.1 How to unpack the product

4.1.1 Removing the items from the packaging

To unpack the product safely:

1. Remove all packaging tape that ties down the fuselage inside the transport carton.
2. Remove the fuselage from the carton. With the landing gear not extended, it is easy to scratch the painted underside. Place on a clean, soft cloth.
3. Begin unpacking the mechanics, rotor blades and the accessories. Check if all parts are included.

4.1.2 Storing the product

The paint used on the fuselage is made from an environmentally friendly polyurethane resin but is not UV-resistant. It is important to store the product in a location that protects it from prolonged exposure to sunlight, as the colors may fade and the clearcoat may yellow.

The epoxy resins and PVC windows have a low glass transition temperature and can become soft and permanently deform at temperatures as low as 50°C/120°F. Avoid storing the product in a car on hot days or in garages or sheds where temperatures may exceed this level.

The batteries used in the RC product must not exceed temperatures of 60°C/140°F to prevent damage. Like all electronic products that bring different metals into contact, exposure to humidity can cause the surfaces to oxidize and potentially harm the product.

To store the product safely:

1. Don’t store above 50°C/120°F
2. Don’t store lithium batteries above 60°C/140°F or below 0°C/32°F
3. Don’t store with exposure to sunlight.
4. Don’t store under humid conditions of 60%RH or above over prolonged periods.

4.2 How to install the product

4.2.1 Assembly of the scale fuselage

Before proceeding with the installation of the mechanics into the fuselage, it is necessary to undertake preparatory steps on the fuselage. Because the belly of the fuselage will scratch easily, it is recommended that the landing gear be installed first. It is important to exercise caution when turning the fuselage over, to avoid any damage to the fuselage's paint. We recommend using a blanket or rug to protect the surface while working on the mechanics, to neither scratch the fuselage nor the landing gear.

4.2.1.1 Remove the top cover as shown:

The top section is secured by magnets and two screws, which hold it in place.

Please unscrew all of them, then remove the top section carefully and place it on a soft cloth to prevent any damage.

4.2.1.2 Mounting the landing gear onto the fuselage

To prepare the landing gear for installation, place it on a flat surface and check that both tubes are flush against the surface. Since the landing gear is made of aluminum tubing, it can be bent by hand to prevent wobbling. Once adjusted, turn the fuselage upside down and position the landing gear (54) in the correct orientation into the grooves of the fuselage. Take your time to center it by either visually measuring or using a tape measure until it is aligned. Secure it in place with two strips of tape. Then, using an electric drill with a 1.5mm drill bit, drill four holes from the outside through the pre-drilled holes in the landing gear all the way through the fuselage. On the inside, pre-installed wooden blocks provide sufficient material for the screws to grip onto.

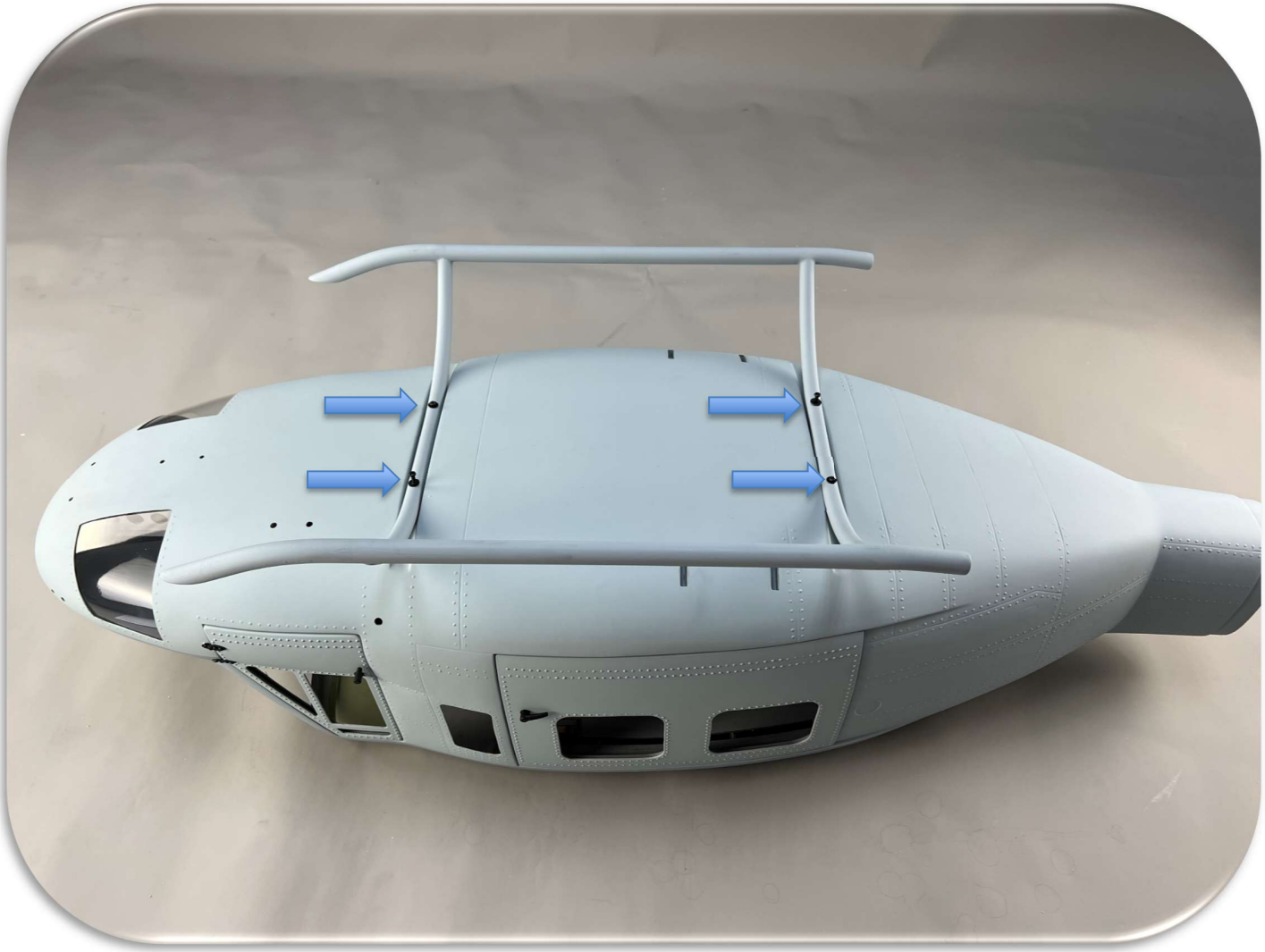

Next, utilize the four screws (38) to fasten and secure the landing gear in place. Please exercise caution and avoid overtightening the screws.

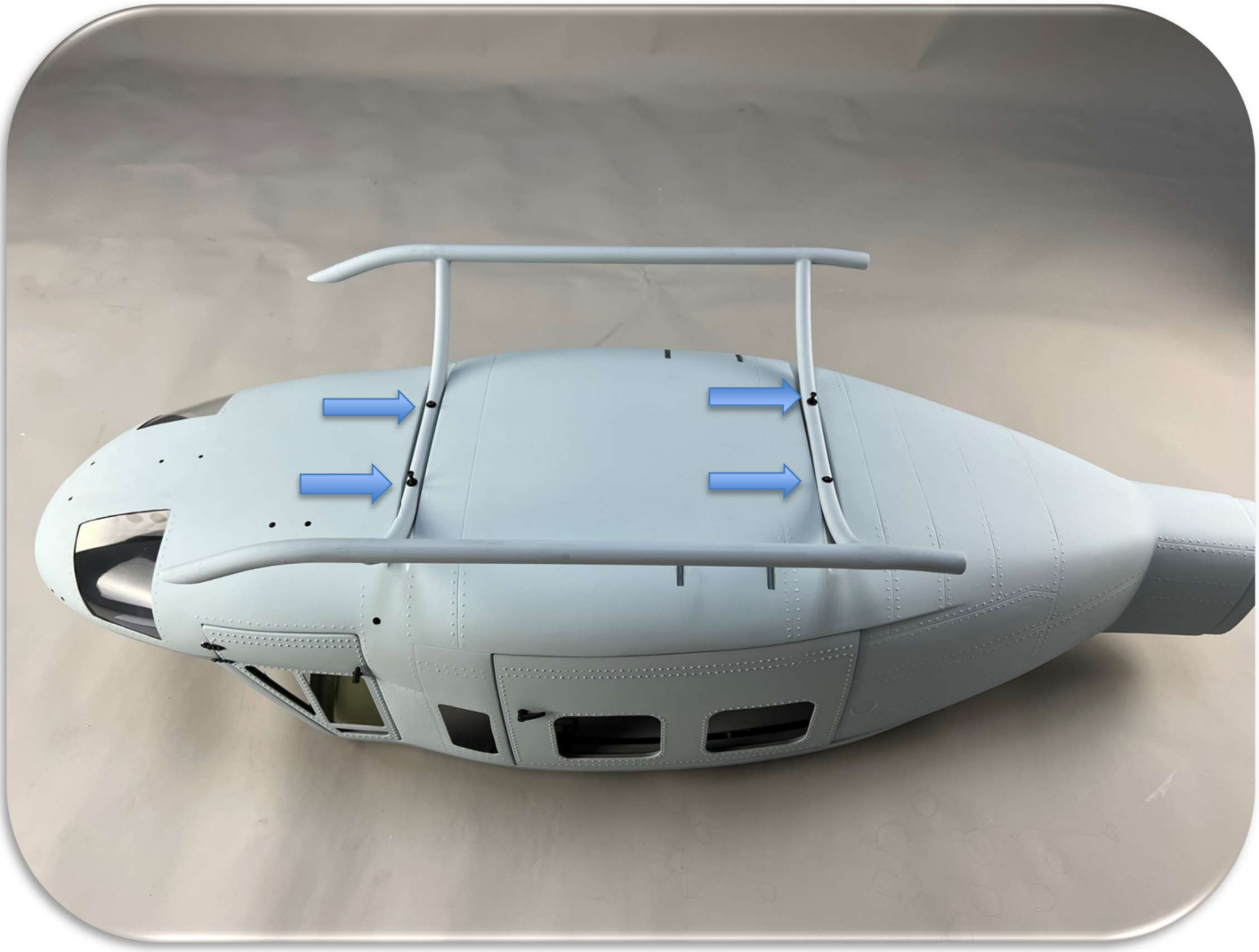

4.2.1.3 Installation of the tail fins and light equipment

When viewed from above with the helicopter's nose facing away, ensure the red LED is on the right side and the green LED is on the left side of the tail boom. Once confirmed, connect both the LED and prolonging wire and insert the wire into the designated hole. Install the position lights, (56) and (57) on both sides of the fuselages as shown with glue. Once the glue is settled, attach the light cap with glue as shown.

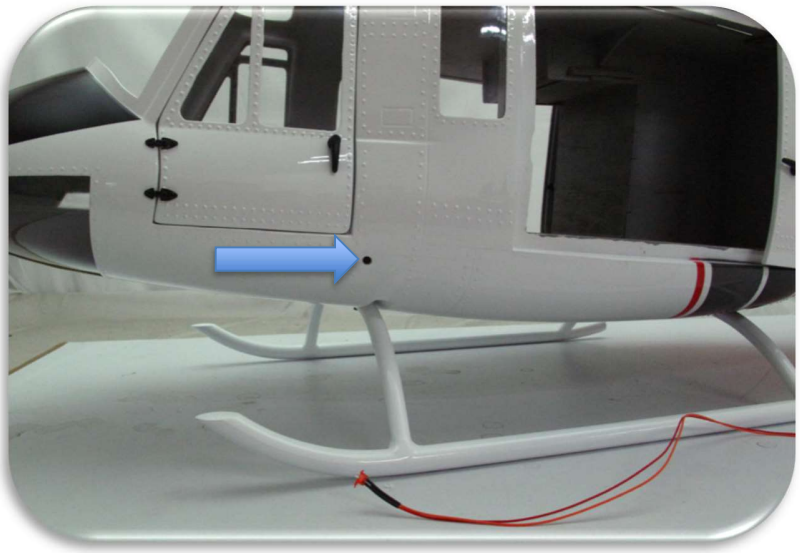

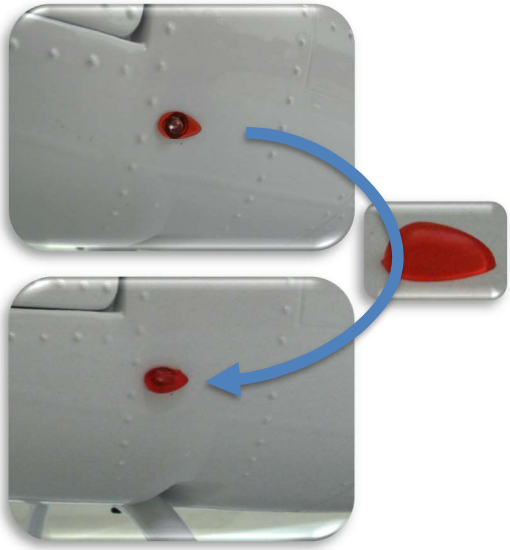

Then, proceed removing the tail boom cover by loosening the screws as shown.

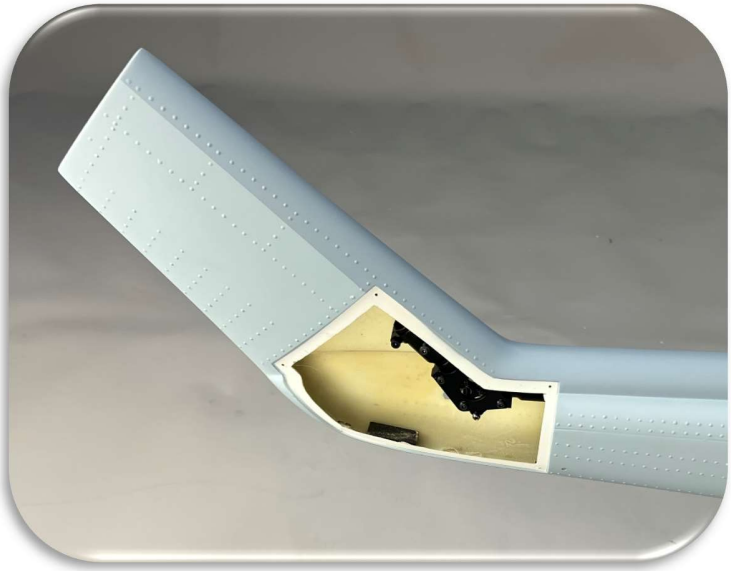

Next, secure the socket of the white LEDs (55) with a small amount of transparent epoxy or acrylic glue on both the hatch and the tail boom. Once the socket's glue has settled, secure the cap (39) of the LED with glue as well. Then connect each of them with a 90mm extension cable (54).

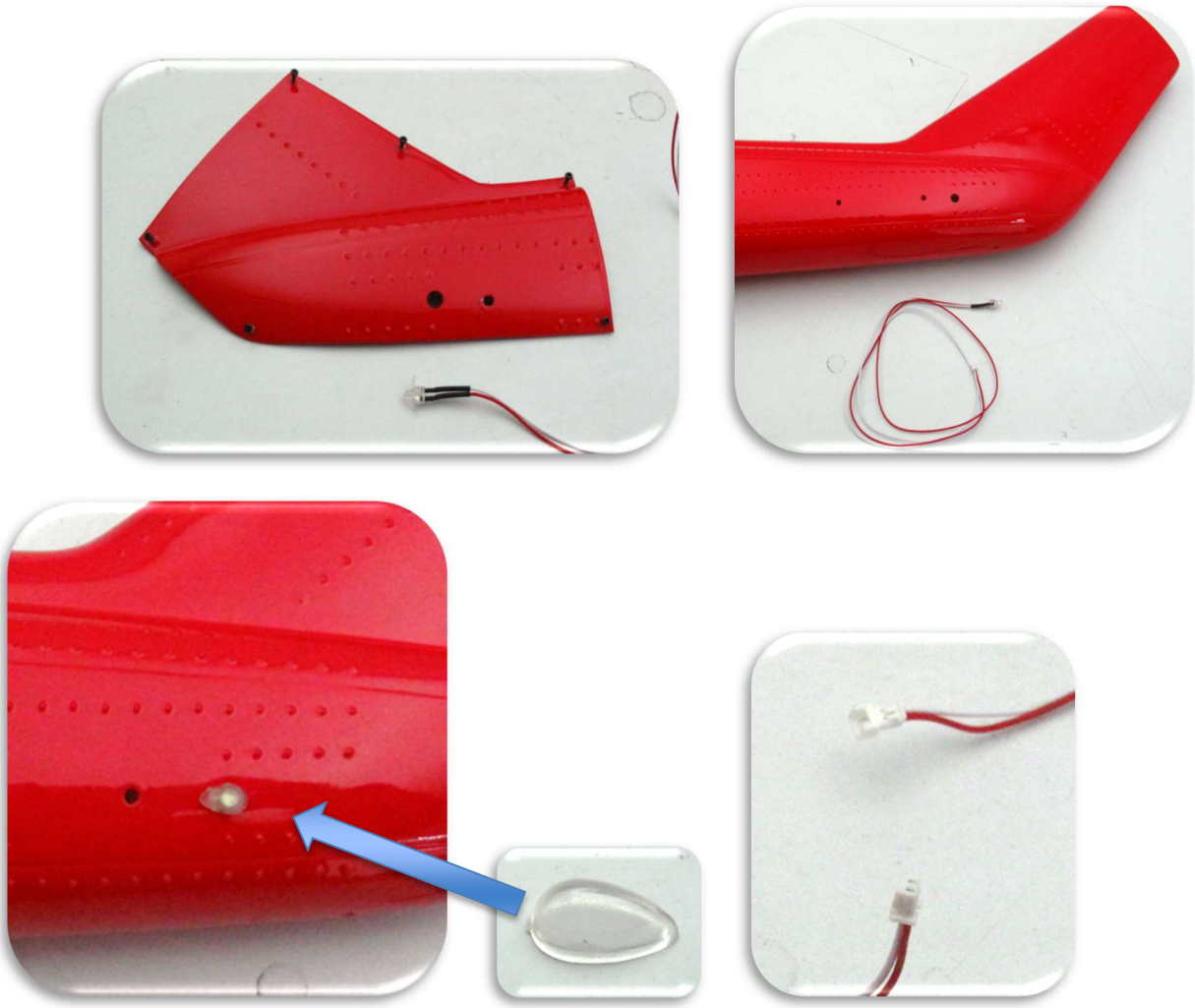

Route the wires to the front of the tail boom, where they will be connected to the light controller later on. We recommend securing them in place with small dabs of hot melt glue.

Next, attache the tail distance skid (44) with glue as shown. Secure it in place until the glue hardened.

Next, install the LED (58) in the top cover as shown with glue. When the glue settled, attach the cap (60) with glue as well. Secure the wire on the side downwards to where you intend to install the light controller with small dabs of hot melt glue.

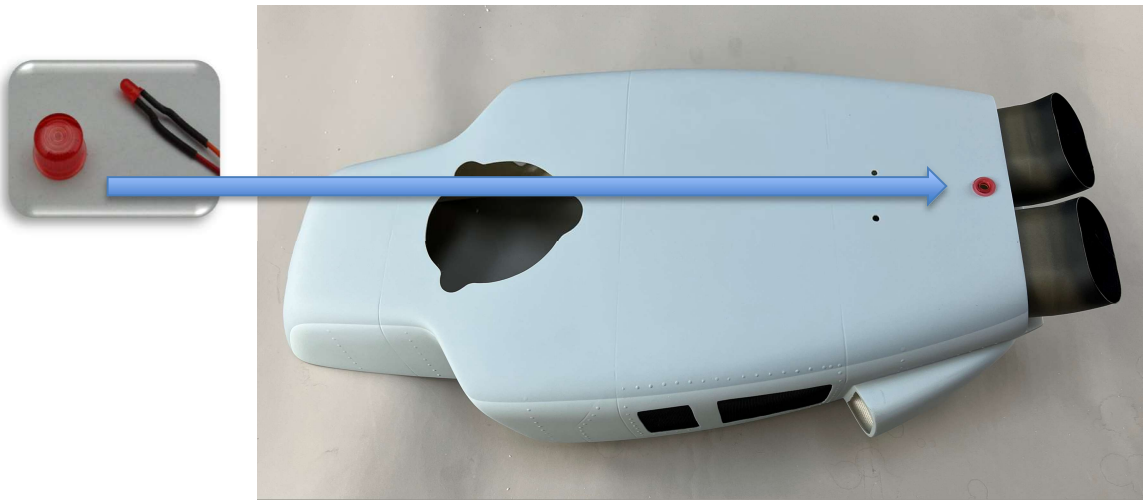

4.2.1.4 Installation of the scale cockpit

Start by installing the seats (64) and (65) as shown with glue in the back of the fuselage.

Then proceed installing the middle seat row into the cutouts on the floorboard, securing them with epoxide glue.

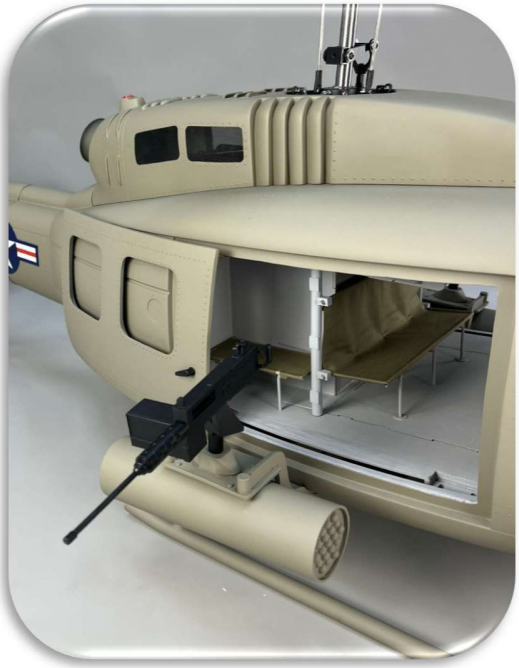

Then connect the top instrument panel to the plug of the center console. Attach the panel to the console as shown using glue.

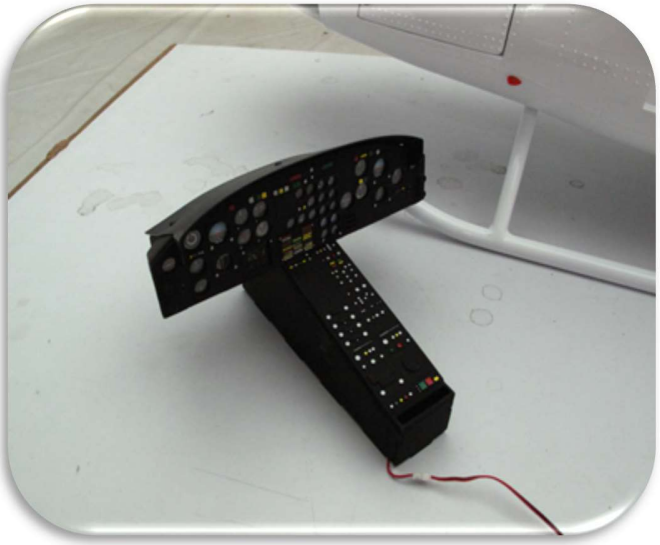

Next, install the center panel unit as shown with glue onto the front cockpit floorboard.

Next, proceed to install the front cockpit control sticks and pedals (69, 70, 71, 72) into the cutouts on the floorboard, securing them with epoxide glue.

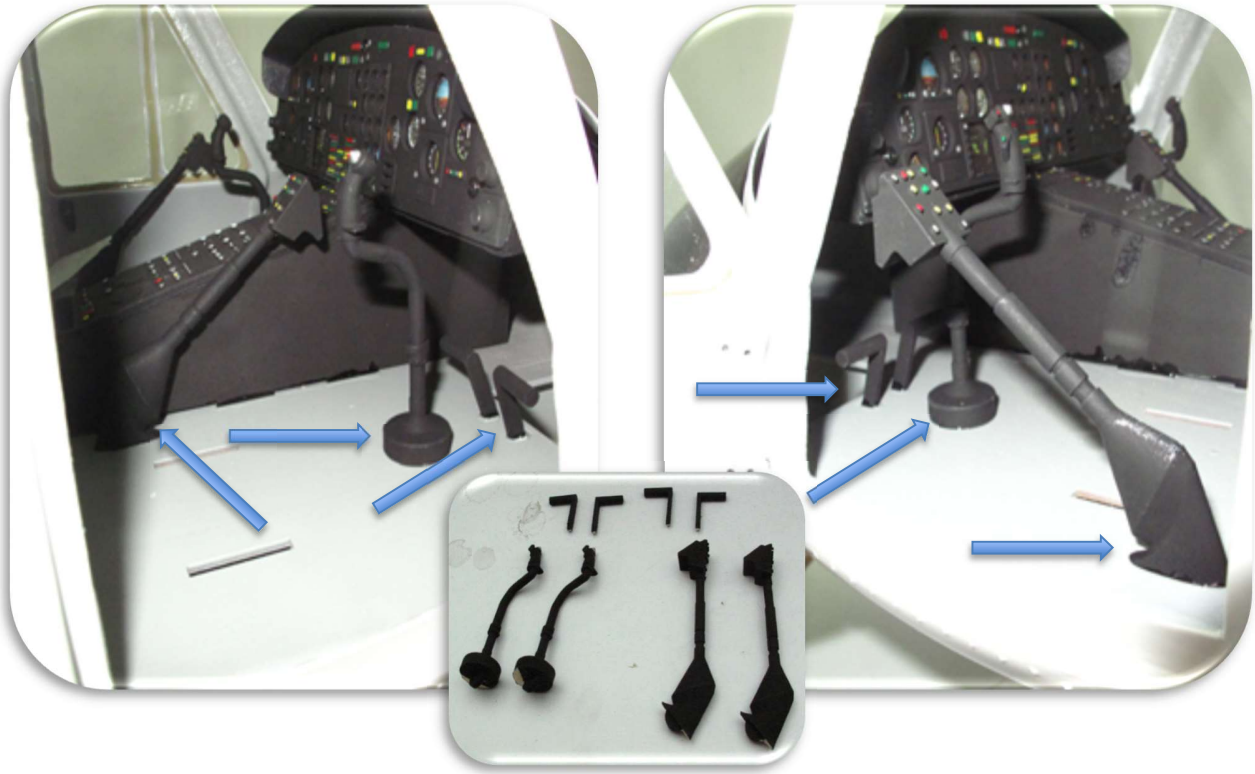

Next, proceed to install the front seats (67). First glue the backside plywood frame onto the seats. After the glue settled secure the seats, according to the cutouts on the floorboard, with epoxide glue.

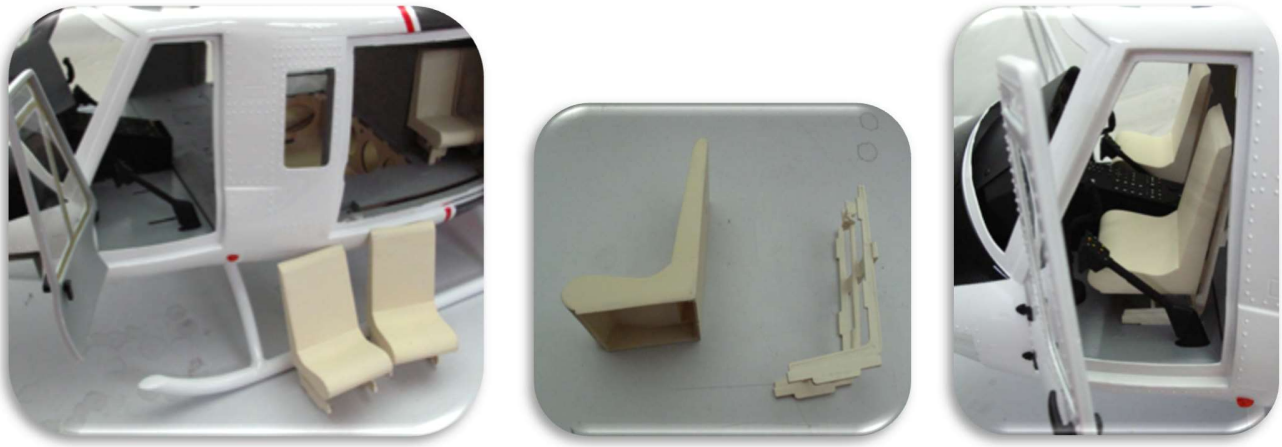

4.2.2 Assembly of the mechanics

The mechanical parts are largely pre-assembled and divided into four sections: rotorhead, main frame, tail frame, and tail tube. Before installing them into the scale fuselage, the mechanics should be fully assembled, electronic components installed, adjusted, and tested. Once installed inside the fuselage, most of the helicopter mechanics become inaccessible.

4.2.2.1 Rotor head assembly

To attach the rotor head to the main shaft, slide it onto the shaft and use screw (M4x25) and lock nut (M4) to secure it. Then, use two screws (M3x15) to further tighten the rotor hub onto the shaft according to the provided diagram.

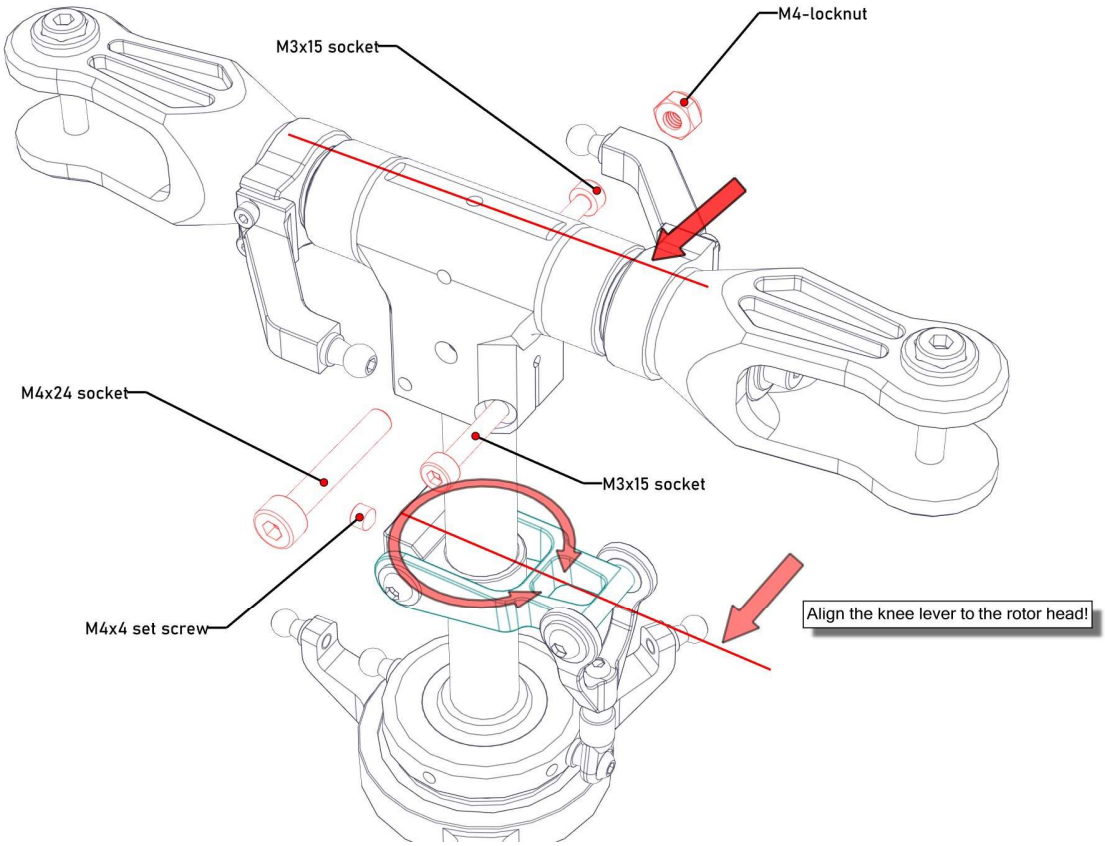

Ensure that the distance between the ball link centers is 110 mm on both sides. Finally, attach the ball links (70-00025) onto the swashplate's upper disc uni-links (70-00030) by snapping them in place. This value should give you exact 0 degree of collective pitch on the rotor grips when the lower swashplate levers that connect to the servos are completely perpendicular. Please do not forget to adjust later on for rotor blade tracking!

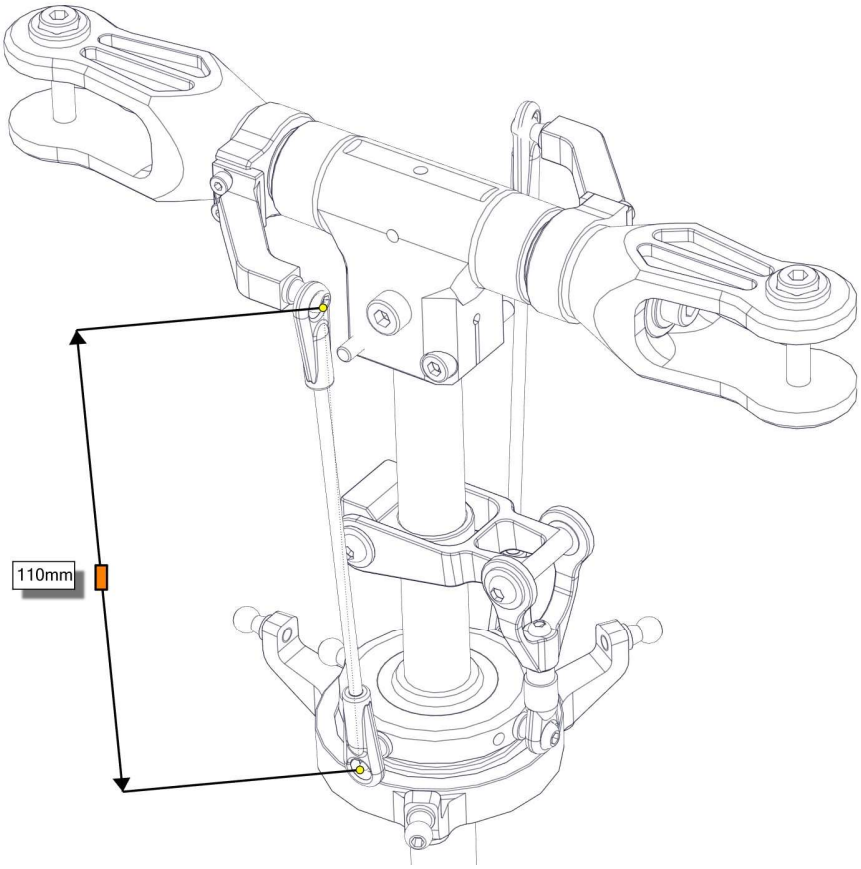

4.2.2.2 Tail boom assembly

To begin, install the center bearings (MR148ZZ) with their holders (1-JJ-70-80005) evenly into the tail boom (1-JJ-70-00429). We suggest applying lubricant to the inner surface of the tube to avoid the bearings getting stuck before reaching the correct position. Install the tail torque tube (1-JJ-70-00430) into the tail tube.

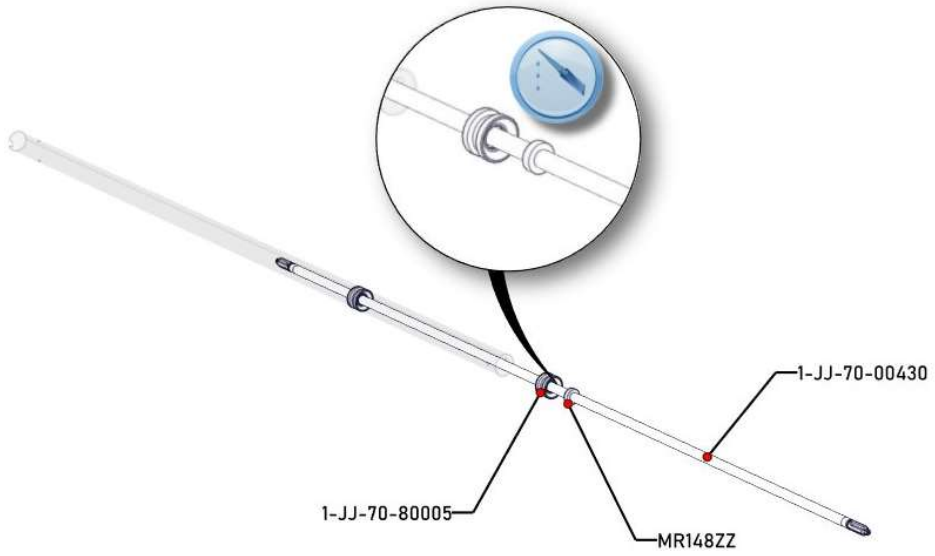

Next, install the rod support rings (1-JJ-70-00040), the carbon rod guides and clamp (1-JJ-70-80016), and the two tail servo holders (1-JJ-70-80018) according to the provided diagram.

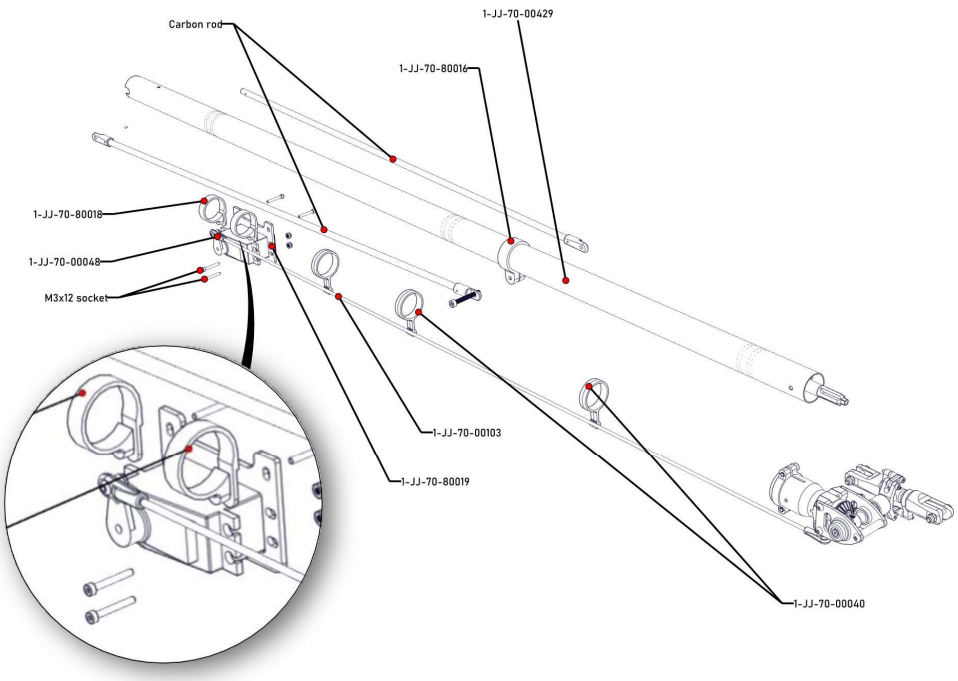

Then, insert the tail boom into the tail boom holders (1-70-ZZ-00002, 1-JJ-70-00094). Secure the tube in place with screw M3x8 via the clamp up and additionally with screw M3x6 as shown. Finally, attach the carbon support beams (70-00104-70-00106) onto the main frame and the tail boom clamp (600UH1-007).

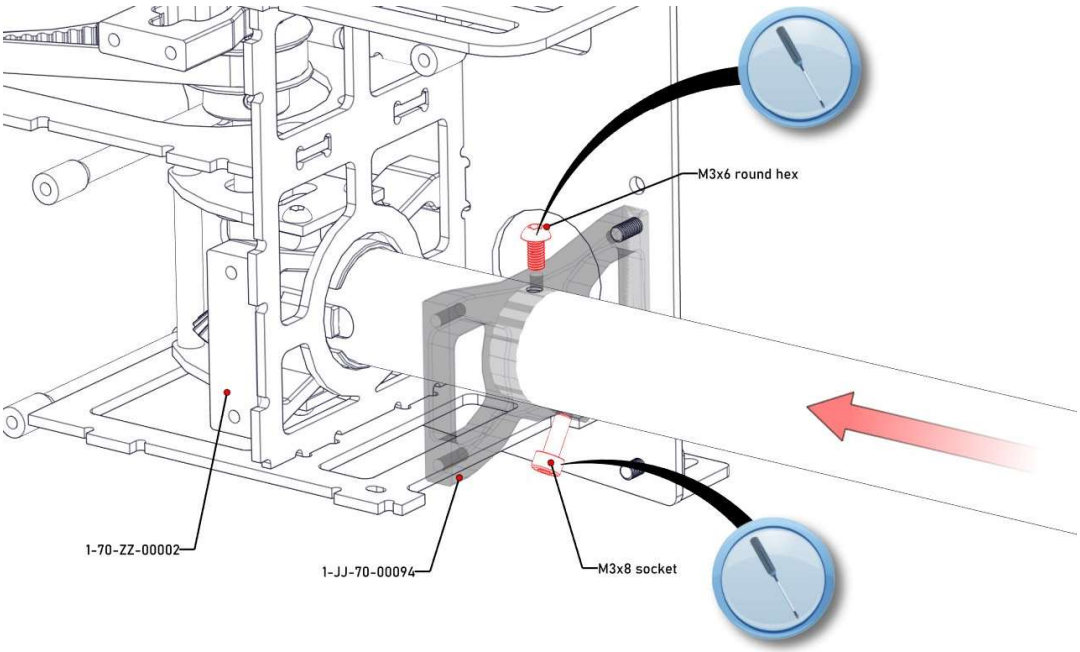

Finally, attach the carbon support beams onto the main frame and the tail boom clamp according to the provided illustration. The below picture shows a carbon rod installed from above, but there are also models where the rods are installed from below the tail boom.

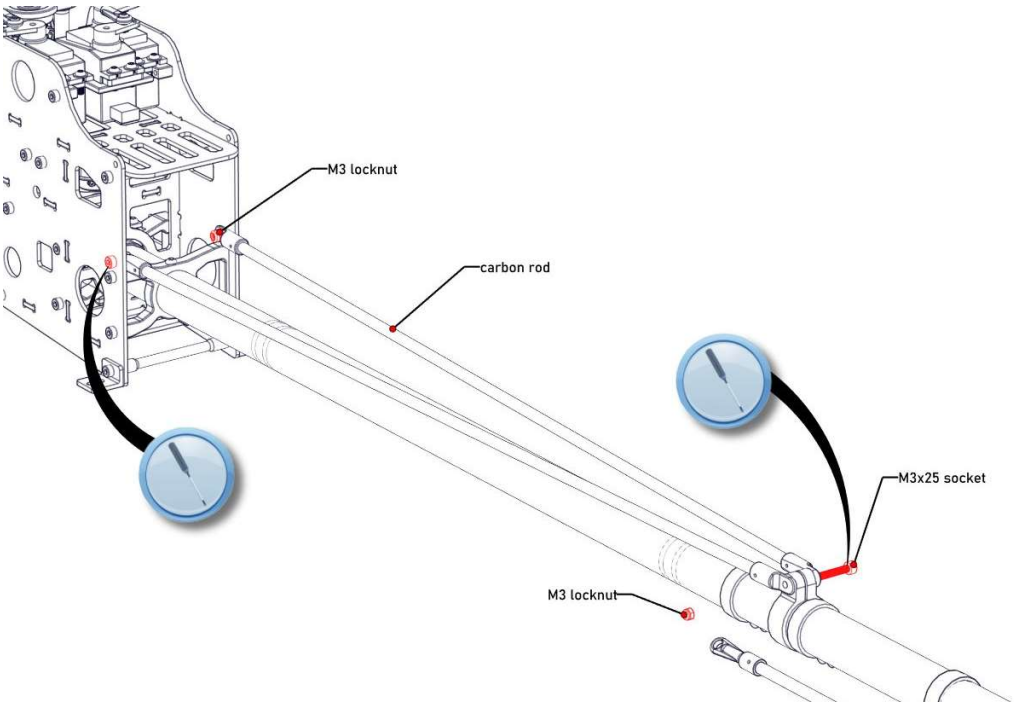

4.2.3 Tail Servo Installation

Begin by mounting the holder frame (70-00097) onto the boom holders (70-00098) using screw M3x8. Afterward, use screws M3x10, washers, and nylon nuts to install the tail servo of your choice into the tail frame as indicated. Be sure to install the servo horn (metal horns only!) and the included uniball. Next, slide the tail rotor control rod (70-00103) into the four guides, distributing them evenly along the tail boom. Install the ball link (70-) on both ends of the tail rotor control rod.

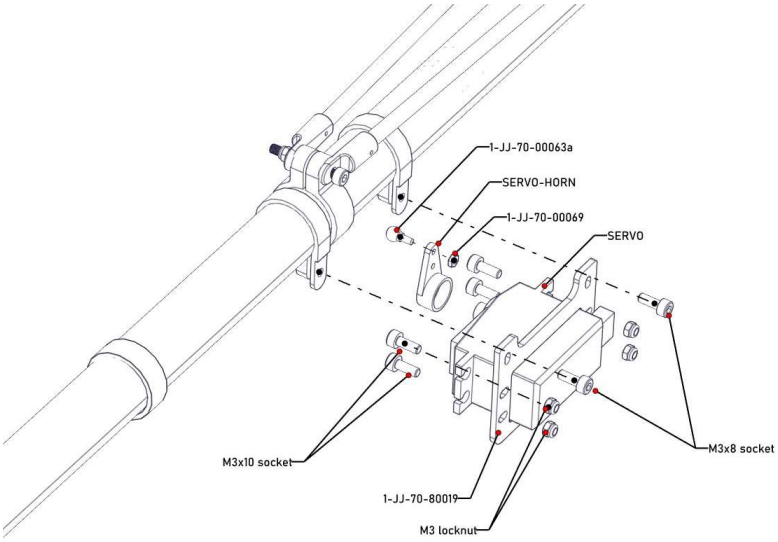

Proceed to install the tail frame onto the tail boom, locking it with the three screws, but do not use thread lock at this stage, as it will need to be uninstalled later. Finally, snap the servo control rod onto the ball link.

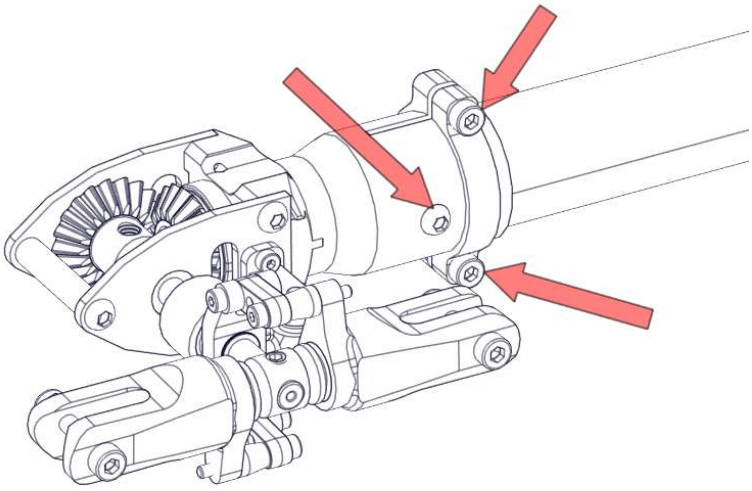

4.2.4 Cyclic Servo Installation

To properly install the three cyclic servos onto the servo tray, follow the instructions below. Use the washers provided to adjust the height of the servos, if necessary, to ensure proper installation. For optimal performance and durability, we recommend using metal servo horns and only metal geared servos. Please note that the multi-blade rotor head may create forces that could potentially cause plastic components to fail.

Once the servos are in place, you will need to adjust the length of the linkage rods according to the provided schematics. The distance between the uniball centers should be adjusted to precisely 96mm to ensure optimal performance.

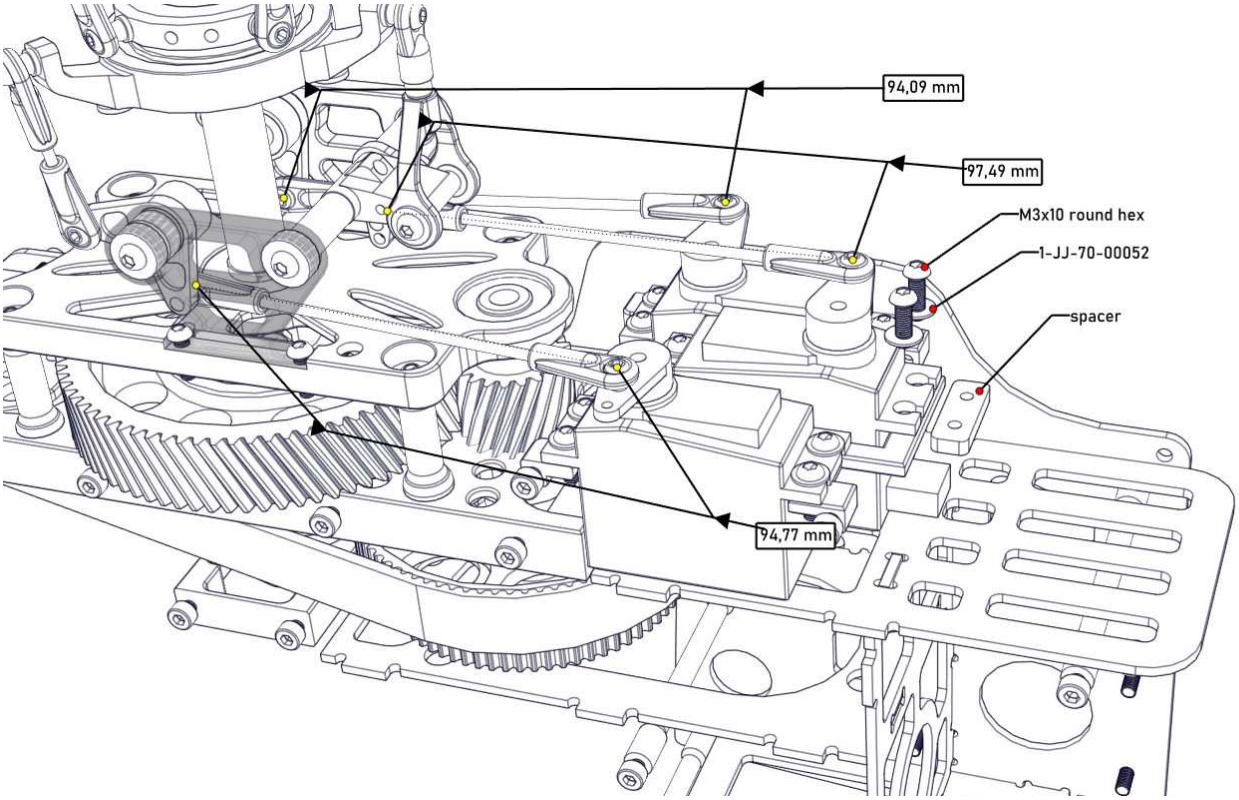

4.2.5 Adjust Swashplate Linkages

To ensure proper functionality, it is important to adjust the linkages from the L-Levers to the swash plate at the correct length. The distance between the uniball centers should be set to 35mm all three levers.

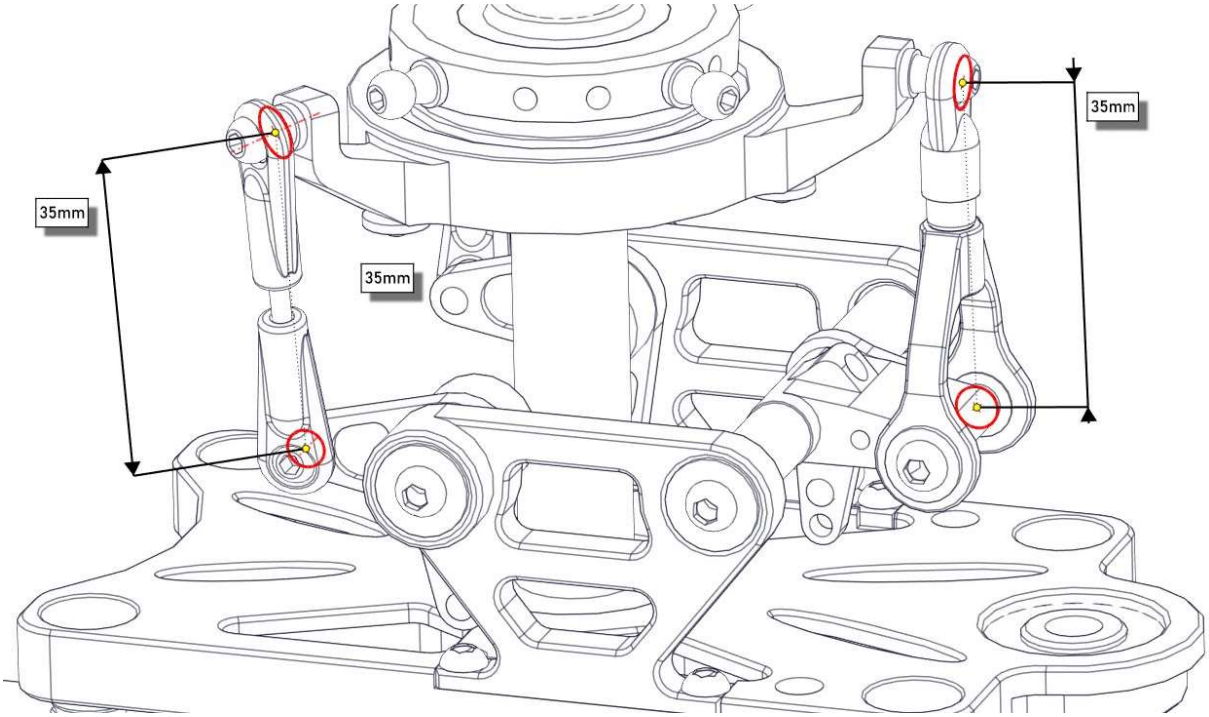

4.2.6 Motor and Belt installations

To install the motor, it is necessary to disassemble one of the side frames to access the mounting screws and belt drive. Before installing the pinion pulley on the motor, a flat must be added to the motor shaft to secure the pulley with the set screws.

Follow these steps to mount the motor: using washers and screws, attach the motor to the motor mount, ensuring that the motor wire outlet faces the right direction for connecting to the ESC. If your motor has a 25mm mount, you can use the additional shaft support. If it's a 30mm mount, just mount the motor without the support. Either way, do not tighten the motor mount screws. Insert the belt pulley into the belt and slide it onto the motor shaft, don't tighten the set screws for the moment.

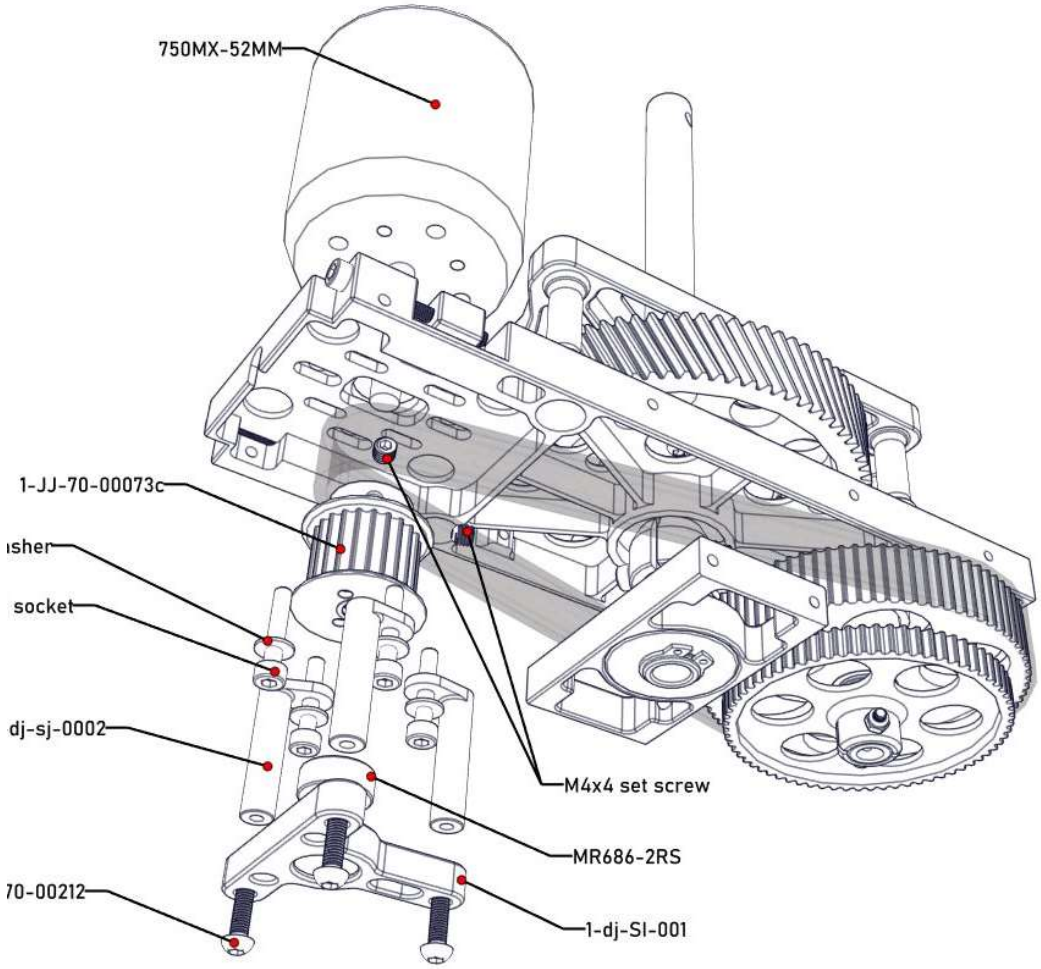

Use both tension screws to adjust the belt drive tension. The belt should not be too tight to avoid unnecessary wear. After installing the motor, reassemble the side frames.

Before tightening the set screws, ensure that the pinion is level with the belt pulley and that the distance is at 18.3mm as shown. Please be advised that a wrongly adjusted belt will cause damage to the secondary drive. Use the small gap in the main frame to tighten the set screws of the pinion gear. Then adjust the tension again, and finally tighten the motor screws. Use thread locking compound.

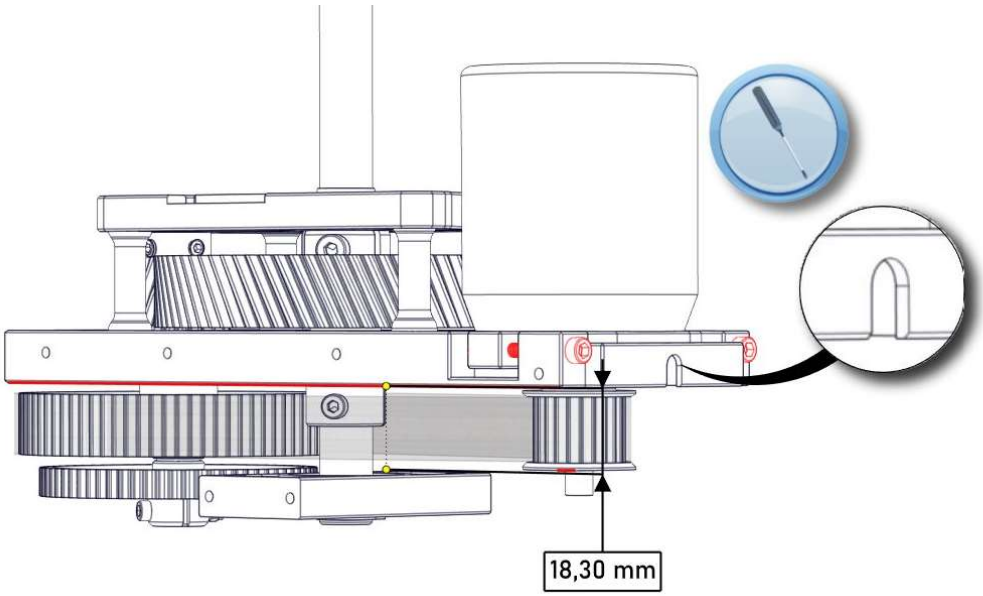

4.3 Installation of electric components and wiring

Prior to installing the mechanics into the fuselage, it is crucial to complete the electrical setup and adjustments. To ensure safety, we strongly recommend using a separate 2S Li-po battery and BEC to power the control equipment, especially since a 12S (44.4V) setup is required.

In scale configurations, the main battery power wires may be longer compared to 3D helicopter equipment. HV ESCs may not have the main battery ground wire connected to the servo signal ground wire, which could lead to a loss of signal at the ESC from the receiver due to EMC effects. To avoid this issue, it may be necessary to create an additional connection between the BEC 2S batteries ground wire and the 12S main battery ground wire.

The swash plate is a regular 120deg CCPM type. Take the time to adjust all servo travels, center positions, and the entire 3 axis gyro-servo-radio setup before installing it into the fuselage.

For optimum results, use a 450KV motor like the Align 750MX, which shows satisfactory results when run at approximately 90% throttle (hover). Be sure to check the dimensions of other brand motors before installation, as space is limited. The use of a shorter main belt may be required for an 850MX motor.

When setting up the gyro, start with standard values of the 3 axis gyro. Install the gyro in a way that provides easy access for connecting your programming equipment. Due to the additional inertia of the scale fuselage, it is recommended to set the gyros at a lower gain to avoid a rigid gyro response that could ruin the scale look in flight.

Before operating the model, check the direction of servo rotation (including the throttle function) and travels, the direction of effect of the gyro, and the transmitter mixer functions you have programmed. Ensure that the collective pitch travel is within linear travel -2/-3° to +9/+11°.

The blade grips are 14mm wide, and the supplied rotor blades are 12mm thick. Use the supplied 1mm PC washers and install one washer on top and one on the bottom of the rotor blade when installing it to the blade grip.

4.3.1 Attention when Commissioning / Testing the Equipment!

To ensure accurate adjustment of the collective pitch travels using a pitch gauge, it is important to align the gauge with the flat surface of the rotor blade. Keep in mind that some pitch gauges may not display the correct angle when attached to non-symmetric rotor blades. Please note that the main rotor blades are not symmetrical, and flying inverted is not recommended.

When adjusting servo travels, it is acceptable to reduce them, but they should not go below 60%. If servo travels are reduced, adjust the mechanical linkage accordingly. It is important to maintain symmetrical servo travels.

To test the range of motion for the collective pitch minimum and maximum, as well as the full roll and pitch-axis commands, rotate the rotor head simultaneously and ensure that no part of the rotor head is obstructed at the extremes of travel. Additionally, assign the auto-rotation switch and ensure that it is within easy reach.

When auto-rotation is selected, the throttle position should be turned off and all control directions and travels should be the same as in normal flight. The tail rotor should be set to 0°, which is a fixed value.

It is recommended that you fly the model close to the ground during the first few battery uses, no higher than about 1m altitude, until you are confident that there are no defects or errors, and that everything is working correctly. Use your ears to listen for any unusual sounds or vibrations and investigate any issues immediately.

4.4 Installation into the scale fuselage

4.4.1 Inserting the mechanics

To properly install the mechanics, start by removing the tail entirely. Next, insert the fuselage according to the diagram provided.

4.4.2 Mounting the tail fuselage

For proper installation, it is essential to route the position light wires to the front, taking care not to damage them during the next step. Gently slide the tail fuselage onto the boom until it sits flush and at the correct height and angle. Secure it in place with a few strips of tape. Next, drill six 1.5mm holes, approximately 10mm from the end of the fuselage, evenly spaced through the circumference. Carefully remove the boom and use epoxy glue to mount the six washer blocks (36) on top of the holes from the inside. It is important to avoid getting any glue inside the hole or the thread area. Allow sufficient time for the glue to settle before proceeding.

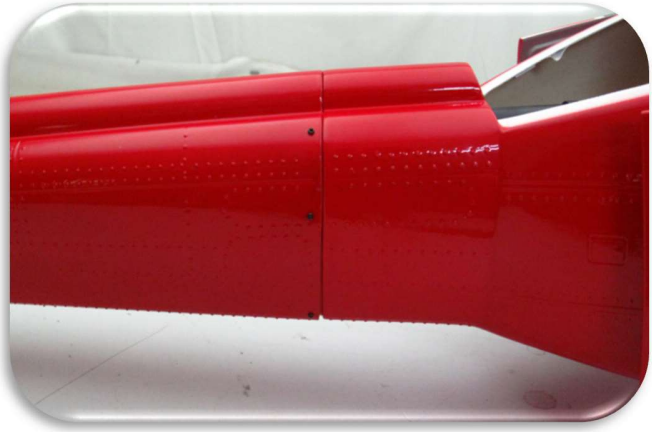

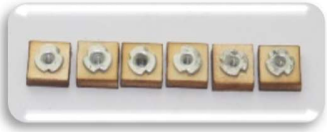

Open the tail access hatch and insert the short shaft into the angled gearbox first. Then insert the short boom with the tail rotor attached to it as shown. Tighten the screws on the gearbox that hold the short boom in place after making sure the tail rotor is perpendicular to the front mechanics.

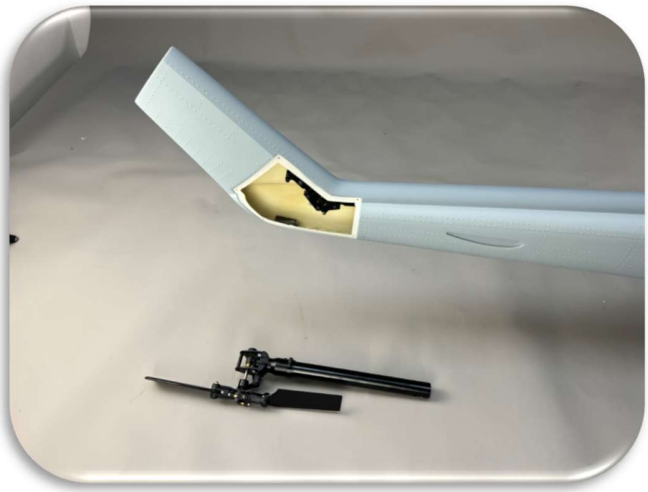

Then connect the linkages on the tail gearbox so that the servo controls the tail rotor pitch again. Close the tail hatch with the screws.

Use the screws (M3x16 socket) and washers (M3) as shown to secure the mechanics in place.

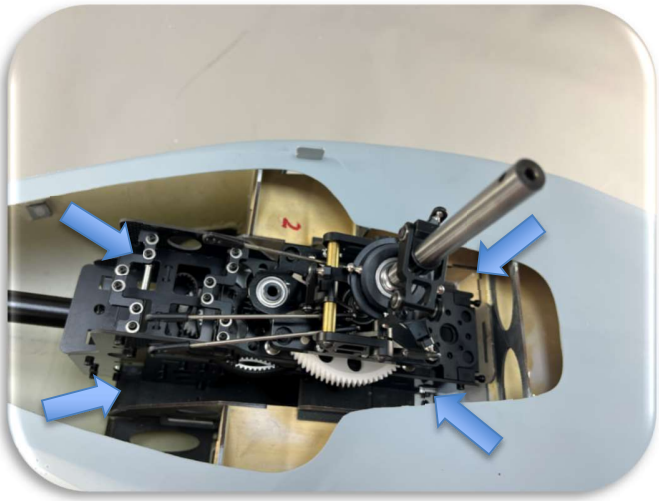

Then screw the tail fuselage onto the front fuselage. Make sure to connect all LED wires with the controller, and that all electrical components are connected. Finally, make sure that the battery cable reach the battery compartment. Only then install the engine hatch and secure it with screws. Finally mount the main rotor head onto the main shaft.

Next, glue the tail wings in place. Ensure they are mounted perpendicular onto the tail boom by fixing them with tape while the epoxide glue settles.

Now your mechanics should be properly set up inside the fuselage. Make sure that when rotating the tail and main rotor there is enough clearance for all moving parts to the fuselage.

4.5 Installation of additional scale parts

Take the front window and use small tape strips to align the window in the frame and then fix it in place. Next take a 1.5mm drill and drill four holes in each corner as shown. Then use the supplied screws to fix the front window in place.

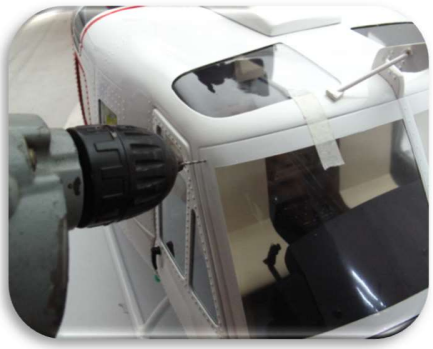

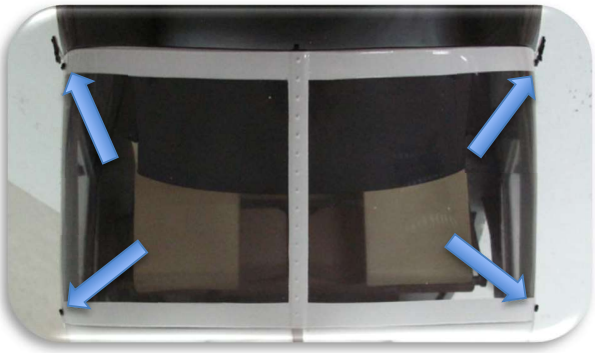

To install the following scale parts, follow these steps:

- Apply a small amount of epoxide glue onto the mounting surface of each part.
- Ensure that the mounting holes on the parts align with the pre-drilled holes on the aircraft.
- Press each part firmly onto the surface to secure it in place.
    - Wait until the glue has fully cured before proceeding with any further installation steps.

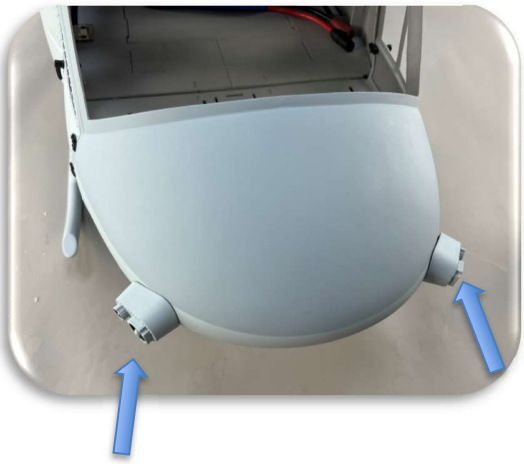

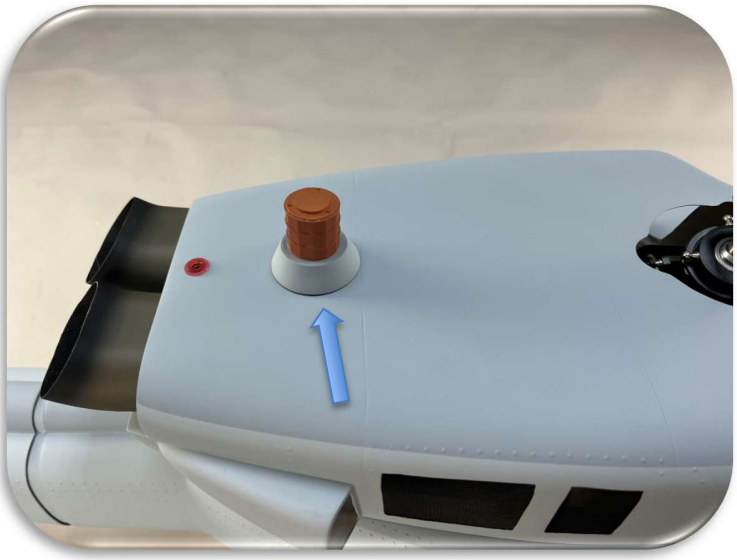

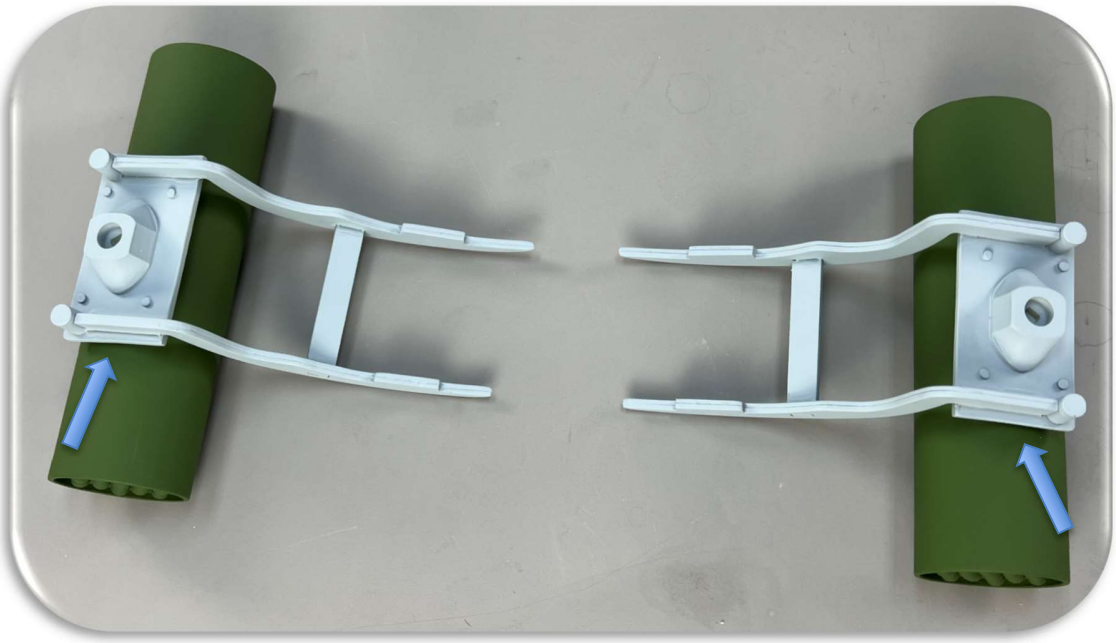

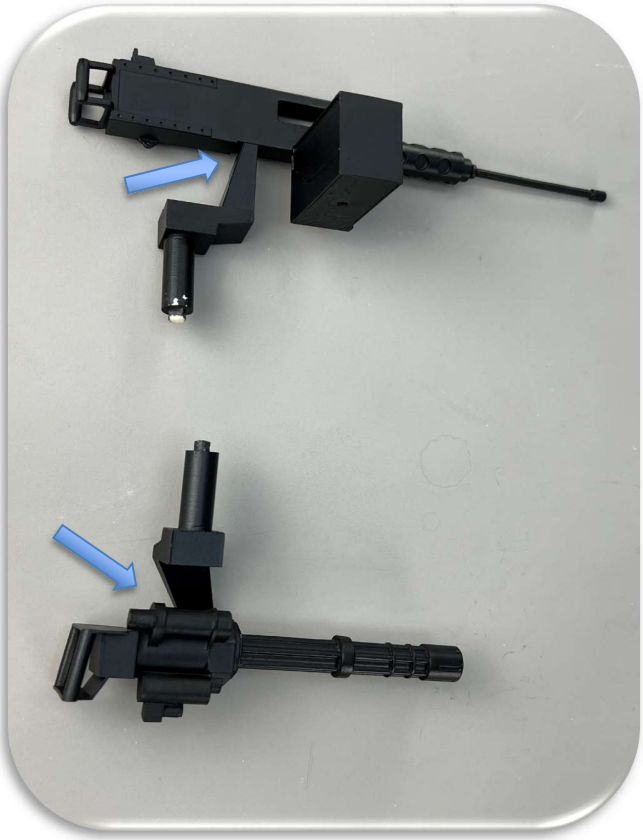

After all scale parts are installed, proceed to applying the water slide decals in the correct positions. We will not go into detail on how to apply water decals in this manual, please check YouTube, there are many great how to instructions for static models available.

4.6 Adjustment of center or gravity

To install the battery, locate the compartment as shown. For an optimal center of gravity, you might need to use trim weights. Use the sticky Velcro strips to secure the battery in place, and additional Velcro straps to tie them down. Always remember to secure the batteries before take-off. If they become loose in flight it can lead to a crash of the aircraft.

If the battery is particularly heavy or of an unusual size, it may be necessary to add trim weights to achieve the correct forward center of gravity. These weights can be added to the nose section below the cockpit panel.

5 Operation/Use

5.1 How to fly

During the initial circuits, it is recommended to start from ground effect and gradually accelerate to a moderate speed in level flight before initiating a climb. Always maintain a brisk forward speed and descend towards the landing area at a steady angle (around 45°) directly into the wind. Avoid bringing the model to a halt until it is in ground effect again, which will enable you to save your model through autorotation. If you experience recurring technical faults, replacing the component concerned may not solve the problem unless you address other operating conditions. Flying scale maneuvers smoothly requires the same level of skill as flying F3C or performing exact 3D figures.

Lastly, it is essential to be realistic when evaluating your piloting skills. Keep in mind that a scale helicopter is heavier and less responsive than a 3D helicopter. Therefore, it is crucial to assess your abilities accurately before attempting complex maneuvers. To put it simply, if you cannot swim, diving into deep water may result in drowning.

5.2 What to do in emergency and exceptional situations

5.2.1 Emergency situation

In case of an emergency situation:

In case of emergency, the first and most important action is to immediately cut off the power supply to the helicopter. This can be done by turning off the transmitter or using the power switch on the helicopter, if available.

If the helicopter loses control and starts to drift, reduce the throttle to minimize the risk of damage upon impact. If the helicopter is too high, try to glide it down to a safe landing spot, preferably away from people or obstacles.

If the helicopter is out of sight or control, immediately notify anyone in the vicinity and make sure the helicopter does not fly towards any populated or restricted areas. Use any available tools, such as GPS or telemetry data, to try and locate the helicopter and its position.

In case of a mechanical failure, immediately attempt to land the helicopter in a safe and controlled manner. If the helicopter is not responding, do not try to force it to respond by adjusting the control inputs. Instead, immediately cut off the power supply and investigate the issue.

If the helicopter crashes, immediately cut off the power supply and assess any damage or injuries. Take necessary steps to secure the crash site and remove any hazards.

In exceptional situations, such as unexpected weather conditions or loss of visibility, immediately cut off the power supply and safely land the helicopter in the best possible location. Do not take any unnecessary risks and prioritize safety above all else.

Remember to always follow local regulations and guidelines for emergency situations and seek professional assistance if needed.

6 Maintenance and cleaning

NOTICE: To keep your scale radio controlled helicopter in optimal condition, it is important to regularly perform maintenance and cleaning. Here are some guidelines to follow.

6.1 How to maintain the product

6.1.1 Product maintenance

Before every flight, inspect the helicopter thoroughly. Check the blades, gears, and other moving parts for damage or wear. Make sure all screws and fasteners are tight.

Clean the helicopter after each flight. Use a soft, damp cloth to wipe down the exterior surfaces. Use a small brush to clean any hard-to-reach areas.

Regularly lubricate the gears and bearings with a light machine oil. Be careful not to over-lubricate, as this can attract dust and debris.

Check the battery regularly for signs of wear or damage. Replace it if necessary.

Store the helicopter in a cool, dry place. Avoid exposing it to extreme temperatures or moisture.

If you crash the helicopter, inspect it thoroughly before attempting to fly it again. Make sure all parts are in working order and properly aligned.

If you notice any unusual noises or vibrations during flight, immediately land the helicopter and inspect it for damage.

Periodically check the receiver and transmitter antennas for damage. Replace them if necessary.

By following these maintenance and cleaning guidelines, you can ensure that your scale radio controlled helicopter stays in top condition and performs at its best.

7 Troubleshooting and repair

NOTICE: Despite the high quality of the components used in your scale helicopter, it is possible that malfunctions can occur during operation. Here are some troubleshooting tips to help you identify and fix any issues.

7.1 Loss of Radio Control

If you experience a loss of radio control during flight, immediately move the control sticks of the transmitter to the neutral position. This might put the model into a hover and may help you regain control. If the helicopter still does not respond to your commands, if you have a programmed failsafe mode, your flight controller can potentially stabilize the helicopter.

7.2 Power Failure

If the helicopter loses power in mid-air, immediately reduce the throttle to zero and perform an autorotation landing. This can be done by using the collective pitch control to reduce the rate of descent and the cyclic control to steer the helicopter towards a safe landing area.

7.3 Vibration

Excessive vibration can cause damage to the helicopter and make it difficult to control. If you notice excessive vibration during flight, land the helicopter immediately and check for loose or damaged components. Check the blades for balance and inspect the rotor head for wear.

7.4 Motor Failure

If the motor fails during flight, immediately reduce the throttle to zero and perform an autorotation landing. Check the motor for damage and replace if necessary.

7.5 Tail Rotor Failure

If the tail rotor fails during flight, the helicopter will start to spin uncontrollably. Reduce the throttle to zero and use the cyclic control to steer the helicopter towards a safe landing area. The most important thing on a autorotation landing is to maintain a high head speed, so you can brake the model when coming close to the ground with the stored rotational energy.

7.6 General Maintenance

Regular maintenance is essential to keep your helicopter in good working condition. After each flight, inspect the helicopter for any signs of wear or damage. Check the blades, rotor head, and other components for any loose or damaged parts. Clean the helicopter with a soft cloth and mild detergent. Avoid using water or any other liquid as it may damage the electronics.

7.7 Repairs

If you need to make repairs to your helicopter, always refer to the manufacturer's instructions. Replace any damaged or worn components with genuine parts. Always use the correct tools and equipment and work in a clean and well-lit area. If you are unsure about any repairs, seek the advice of a qualified technician.

Remember that the safety of yourself and others is the top priority when operating a scale helicopter. Always follow the manufacturer's instructions and guidelines and take appropriate safety measures.

8 DISPOSAL

Proper disposal of the product is essential to ensure safety and environmental protection. When the time comes to dispose of your scale radio-controlled helicopter, please follow these guidelines:

Do not dispose of the product in regular household waste or recycling bins. The product contains electronic and mechanical components that require special handling.

Contact your local waste management facility or recycling center for guidance on how to properly dispose of the product. They will have specific instructions on how to handle electronic and mechanical components, batteries, and other hazardous materials.

If you need to dispose of batteries, do not throw them in the trash. Contact a battery recycling facility or check with your local waste management facility for information on how to properly dispose of batteries.

Consider donating or selling the product to someone who can make use of it instead of disposing of it. This is an environmentally friendly option that can help reduce waste.

Always follow local regulations and laws when disposing of the product. Some areas may have specific requirements or restrictions on how to dispose of electronic and mechanical devices.

By following these guidelines, you can help protect the environment and ensure the safe disposal of your scale radio controlled helicopter.

Appendix A. Explosion drawings and spare parts

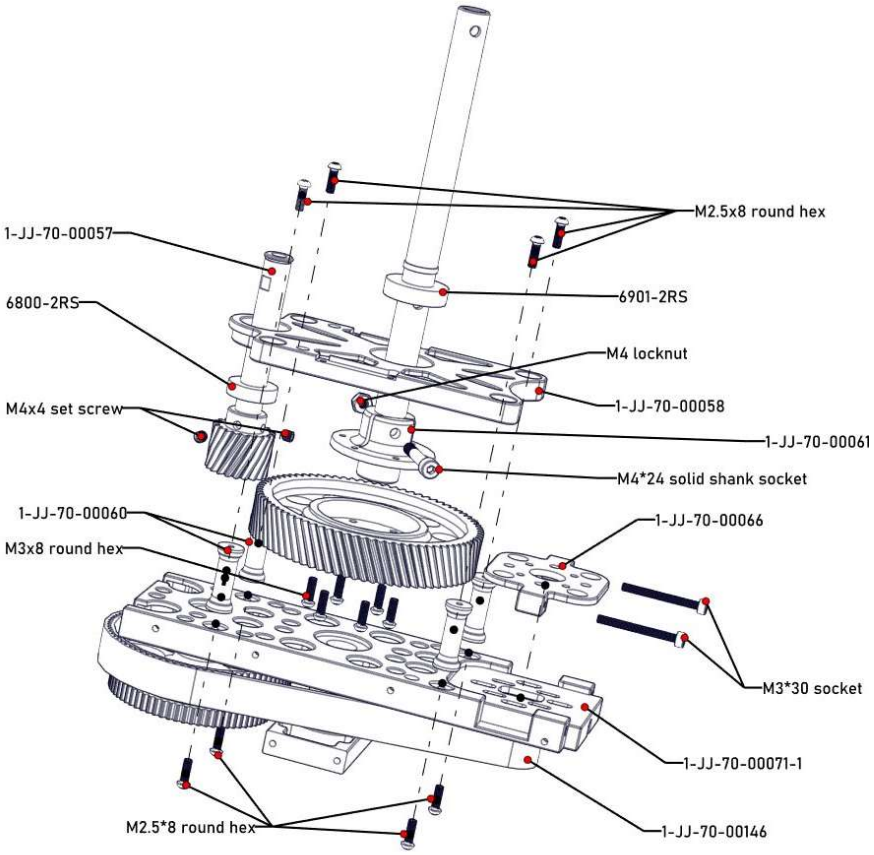

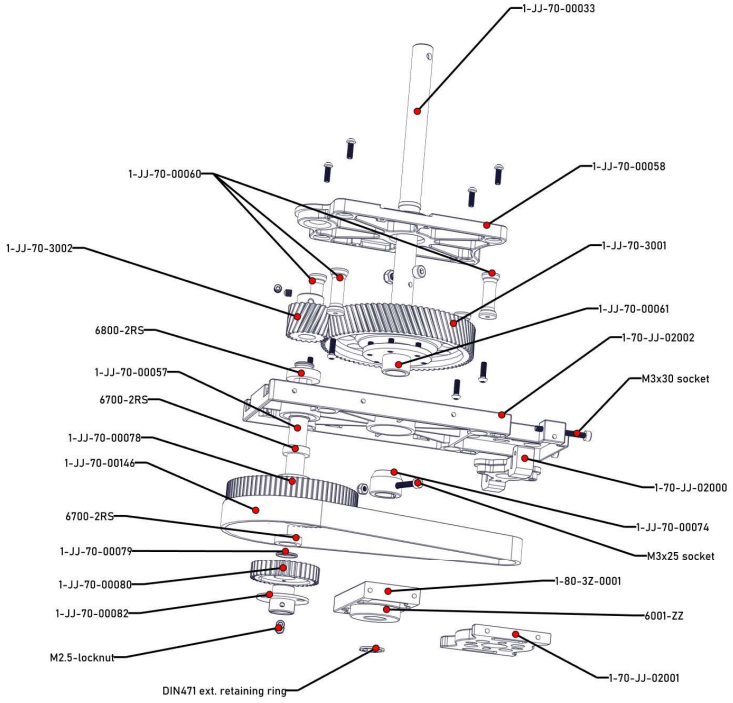

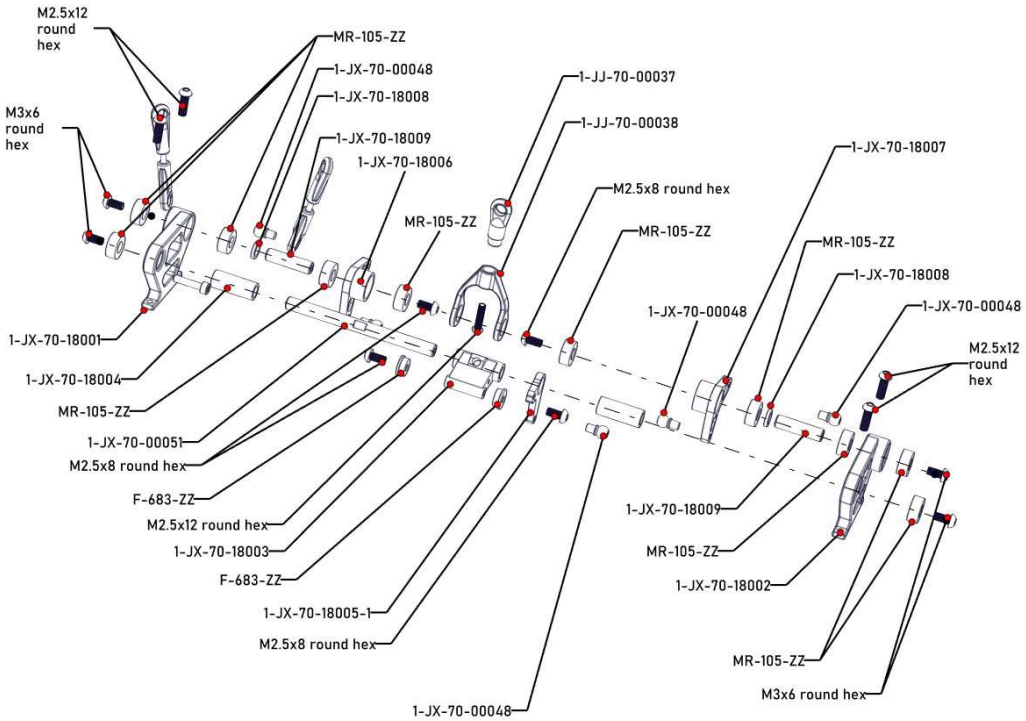

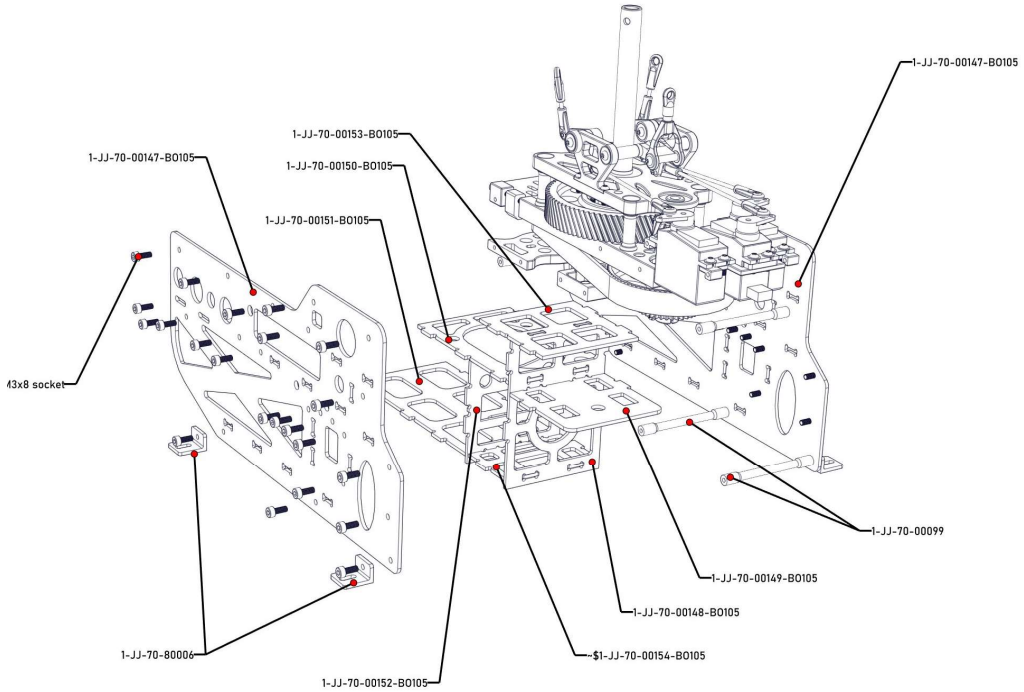

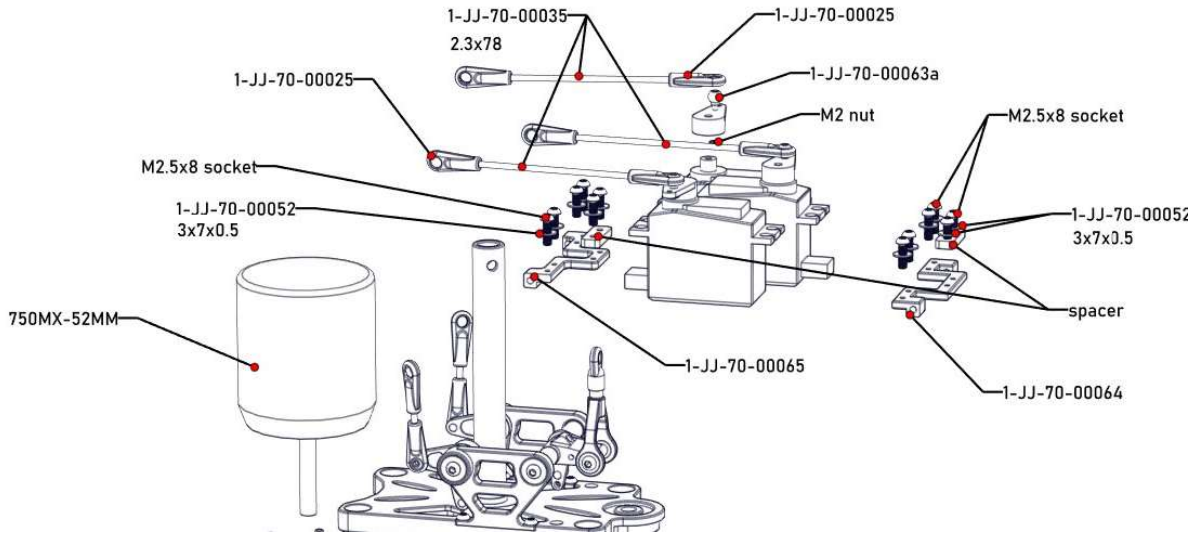

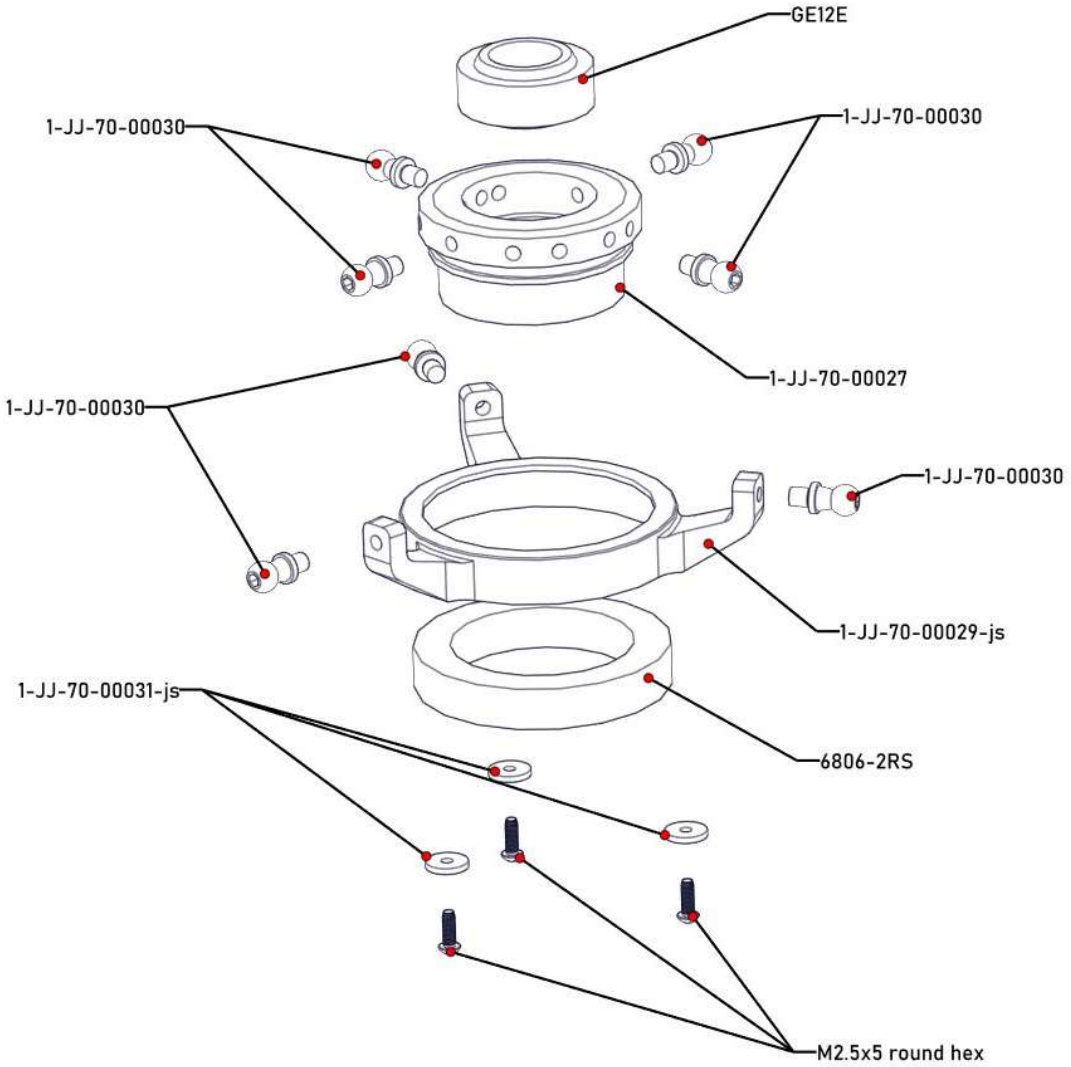

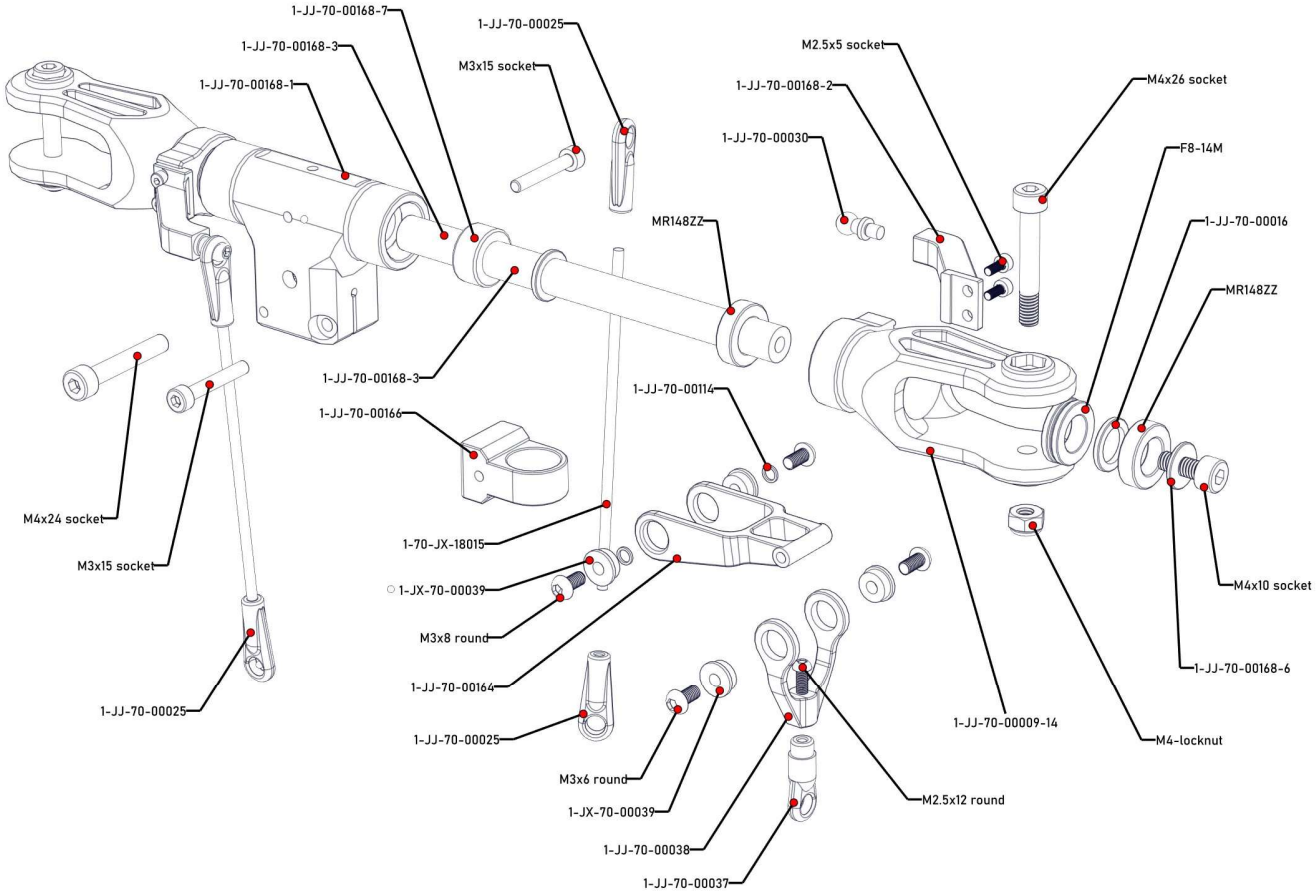

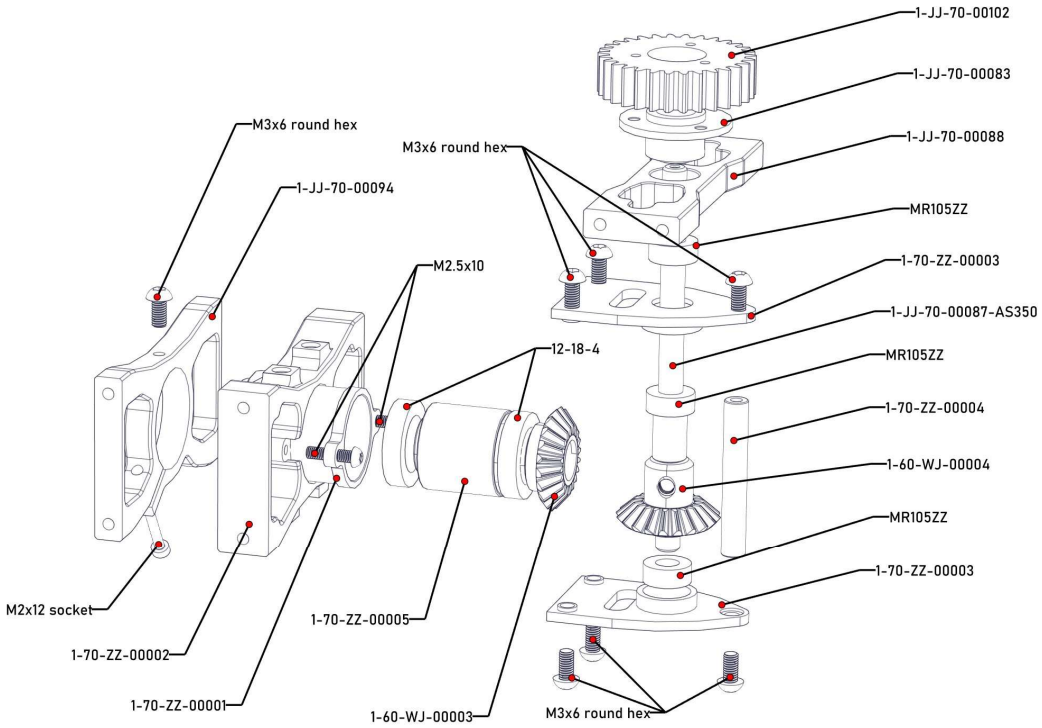

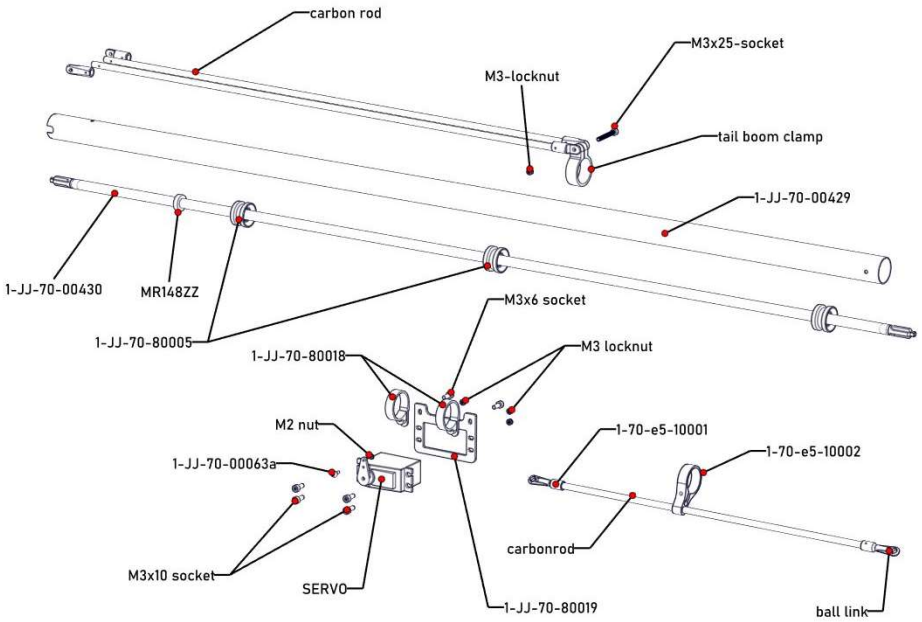

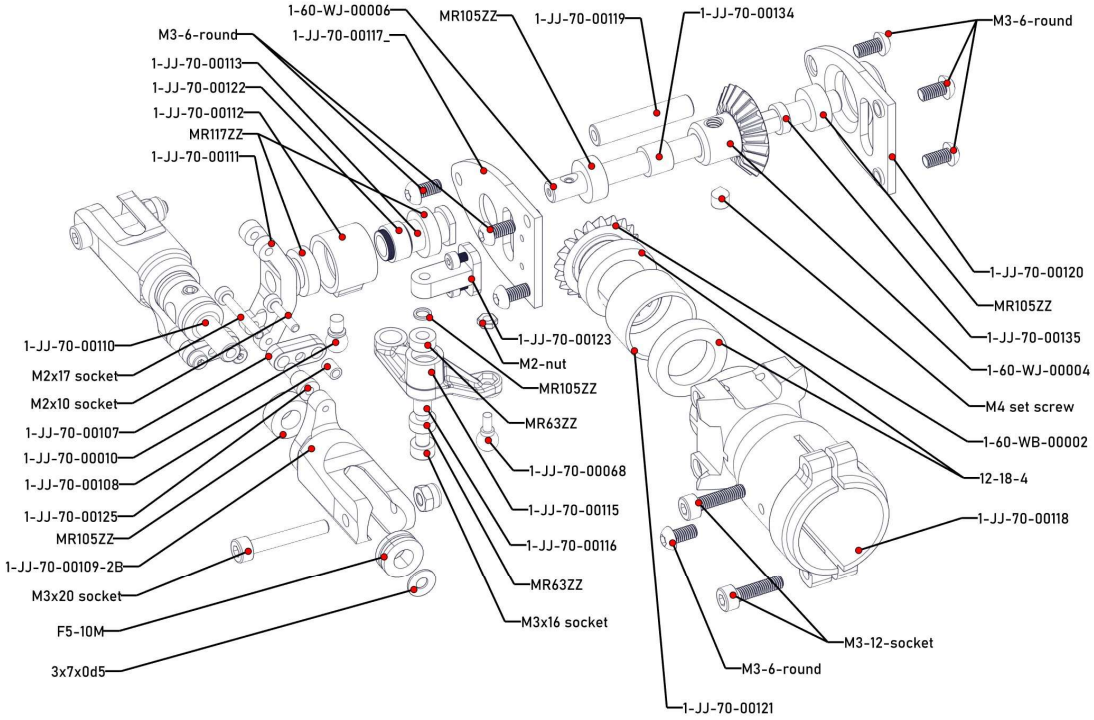

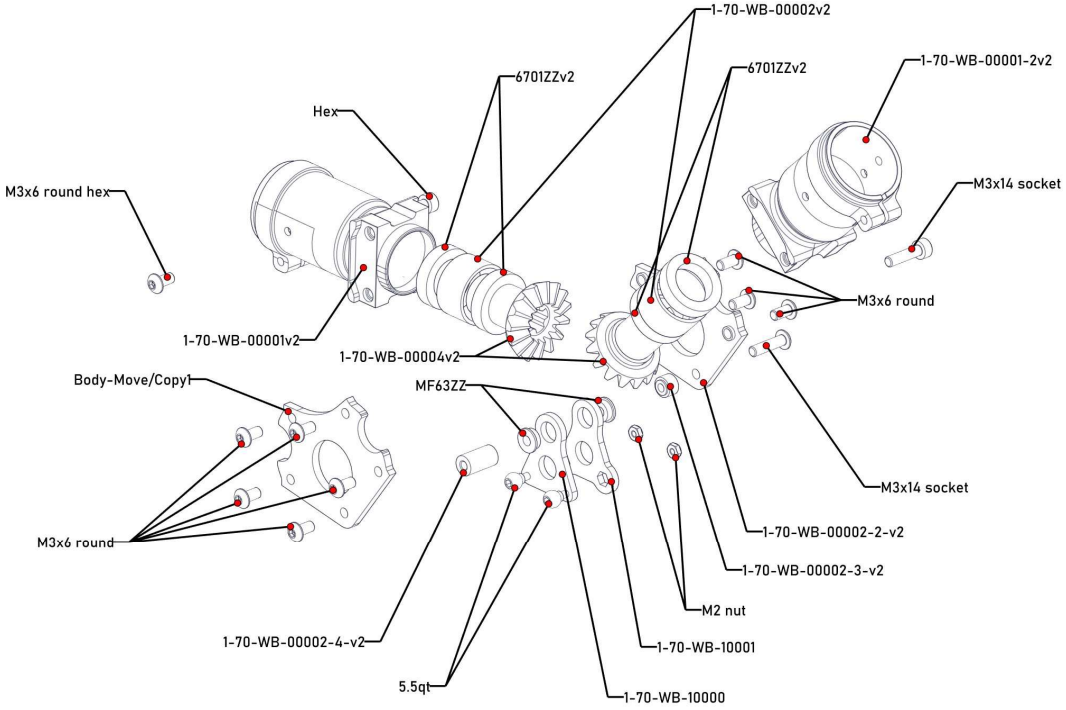

Appendix B mechanic replacement parts

SPAREPART SKU	SPAREPART NAME	PART NO	DESCRIPTION	CHINESE	QTY	PICTURE
RCH-70-001-412	Side Frames	1-JJ-70-00147	Main Frame Set	全碳侧板	2	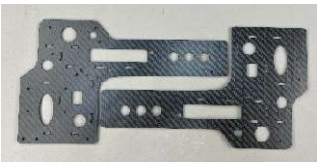
RCH-70-001A-412	Center Frames	1-JJ-70-00148	Center Frames	侧板加强板		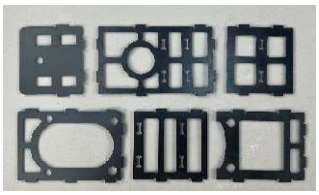
RCH-70-002	Distancer 6x62	1-JJ-70-00099	Distancer 6x62	加强柱子	9	
RCH-70-005	Upper base plate	1-JJ-70-00058	Upper base plate	机架上支撑板	1	
			Bearing 6901RS	24*12*6 轴承	1	
			Bearing L-1910ZZ	19*10*5 轴承	1	
			M2.5x12 socket	M2.5*12 杯头螺丝	4	
			M2.5 nyloc nut	M2.5 防松螺母	4	
RCH-70-006	Lower base plate	1-JJ-70-00071	Lower base plate	机架下支撑板	1	

			Bearing 6901RS	24*12*6 轴承	1	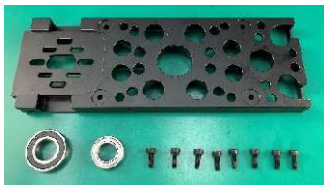
			Bearing L-1910ZZ	19*10*5 轴承	1	
			M3x10 socket	M3*10 杯头螺丝	8	
RCH-70-007	Motor holder	1-JJ-70-00066	Motor holder	马达座	1	
		1-JJ-70-00067	M3x30 socket	M3*30 杯头内六角螺丝	2	
RCH-70-008	L-Bracket	11-600UH1-003	L-Bracket	机架固定 L 配件	4	
RCH-70-009	Main gear hub	1-70-JJ-00061	Main gear hub	大齿铝套	1	
			M3x8 round hex	M3*8 半圆头螺丝	6	
RCH-70-U002	Helical main gear 78T	1-70-JJ-3001	Helical main gear 78T	78T 斜齿轮	1	
RCH-70-U003	Helical pinion gear 20T	1-70-JJ-3002	Helical pinion gear 20T	20T 斜齿轮	1	
			M4x4 set hex	M4*4 机米	2	
RCH-70-011-CCW all models, except RCH-70-011-CW	Belt pulley set	1-JJ-70-00075	Washer 10x12x0.5	垫片	1	

for AH1, AS350, EC665, EC225		1-JJ-70-00076	Needle Bearing 1015	滚珠轴承 10x15x5	2	
		1-JJ-70-00077	One way bearingHF1012	单向轴承 10x14x12	1	
		1-JJ-70-00078	Belt pulley 78T	皮带同步轮	1	
		1-JJ-70-00079	Washer 10x12x1	垫片	1	
			Washer 10x12x1	垫片	6	
RCH-70-012-36	Gear 1M 36T	1-JJ-70-00080	Gear 1M 36T	36T 过渡尾传动齿轮	1	
RCH-70-012-30	Gear 1M 30T	1-JJ-70-00102	Gear 1M 30T	30T 过渡尾传动齿轮	1	
RCH-70-013-32	Gear 1M 32T	1-JJ-70-00082-1	Gear 1M 32T	32T 过渡尾传动齿轮	1	
RCH-70-013-40	Gear 1M 40T	1-JJ-70-00082-2	Gear 1M 40T	40T 过渡尾传动齿轮	1	
RCH-70-014-30	Gear holder 30T & 32T	1-JJ-70-00083	Gear holder 30T32T	过渡尾传动齿轮铝件 2 30T32T	1	

			M4x4 set hex	M4*4 机米	1	
			M2.5x6 CS hex	M2.5*6 沉头螺丝	3	
			M2.5 nyloc nut	M2.5 防松螺母	3	
RCH-70-014-40	Gear holder 36T & 40T	1-JJ-70-00082	Gear holder 36T40T	过渡尾传动齿轮铝件 2 36T40T	1	
			M2.5x20 socket half thread	M2.5*20 杯头半牙螺丝	1	
			M2.5x6 CS hex	M2.5*6 沉头螺丝	3	
			M2.5 nyloc nut	M2.5 防松螺母	4	
RCH-70-015	Belt pinion 22T	1-JJ-70-00073	Belt pinion 22T	马达皮带轮	1	
			M4x4 set hex	M4*4 机米	2	
RCH-70-016	Swash drive		M3x6 round hex	M3*6 半圆头螺丝	2	
			M2.5x12 round hex	M2.5*12 半圆头螺丝	1	
		1-JJ-70-00037	Ball link 5mm	升降球头扣	1	
		1-JJ-70-00038	U-Lever	升降摇臂 1	1	
		1-JJ-70-00039	Flanged bearing F683ZZ	法兰轴承 3x7x3	2	

RCH-70-017	Distancer 10x25.1	1-JJ-70-00060	Distancer	机架上下板支撑柱	4	
			M3x6 socket	M3*10 杯头螺丝	8	
RCH-70-018	Collar 12mm	1-JJ-70-00074	Collar 12mm	主轴限位器	1	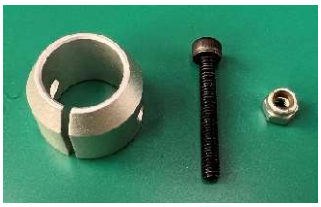
			M3x22 socket	M3*22 杯头螺丝	1	
			M3 nyloc nut	M3 防松螺母	1	
RCH-70-019-LG-V2 f. Bell 412, 212, 222, UH1N/D, Airwolf, AH64, EC665	Main Shaft 12mm	1-JJ-70-00161	Main Shaft 12mm	长主轴 眼镜蛇，飞狼，贝尔 412，贝尔 222，贝尔 212，老虎	1	
RCH-70-019-V2 all other models	Main Shaft 12mm	1-JJ-70-00033	Main Shaft 12mm	短主轴 黑鹰，休斯，阿帕奇，贝尔 429， 贝尔 407, 松鼠,130/135	1	
RCH-70-020	Shaft 10x76.1	1-JJ-70-00057	2ND stage shaft	过渡减速轴	1	
RCH-70-021-2B-V2	Swash Plate 2B			2 桨十字盘		

RCH-70-021-3B-V2	Swash Plate 3B			3 桨十字盘		
RCH-70-021-4B-V2	Swash Plate 4B			4 桨十字盘		
RCH-70-021-5B-V2	Swash Plate 5B			5 桨十字盘		
RCH-70-022 -2B-V2	Rotorhead center hub 2B	1-JJ-70-00003	Center hub	V2 版 2 桨中联	1	
			M4x25 socket half thread	M4*25 杯头半牙螺丝	1	
			M3x15 socket	M3*15 杯头螺丝	2	
			M4 nyloc nut	M4 防松螺母	1	
		1-JJ-70-00168-7	Rubber grommet	13*8*7 橡胶圈	4	
RCH-70-022 -3B-V2	Rotorhead center hub 3B		1-1T-XY-0004	V2 版 3 桨中联	1	
			M4x25 socket half thread	M4*25 杯头半牙螺丝	1	
			M3x12 socket	M3*12 杯头螺丝	2	

			M4 nyloc nut	M4 防松螺母	1	
			Shaft w. washer and screw	50*8 轴含垫片螺丝	3	
			Pin 3x14	14*3 插销	3	
			3MM tungsten carbide drill	3MM 不锈钢钻头	1	
RCH-70-022 -4B-V2	Rotorhead center hub 4B		1-1T-XY-0004	V2 版 4 桨中联	1	
			M4x25 socket half thread	M4*25 杯头半牙螺丝	1	
			M3x12 socket	M3*12 杯头螺丝	2	
			M4 nyloc nut	M4 防松螺母	1	
		1-1T-XY-0004	Shaft w. washer and screw	50*8 轴含垫片螺丝	4	
			Pin 3x14	14*3 插销	4	
			3MM tungsten carbide drill	3MM 不锈钢钻头	1	
RCH-70-022 -5B-V2	Rotorhead center hub 5B		1-1T-XY-0004	V2 版 5 桨中联	1	
			M4x25 socket half thread	M4*25 杯头半牙螺丝	1	
			M3x12 socket	M3*12 杯头螺丝	2	

			M4 nyloc nut	M4 防松螺母	1	
			Shaft w. washer and screw	50*8 轴含垫片螺丝	5	
			Pin 3x14	14*3 插销	5	
			3MM tungsten carbide drill	3MM 不锈钢钻头	1	
RCH-70-023	Rotorhead Cap	1-JJ-70-00001	Rotorhead Cap	刹车盖	1	
			M3x15 socket	M3*15 杯头螺丝	1	
RCH-70-024	Bearing set 1		Washer 8x12x1.3	8*12*1.3 铜垫片	2	
		1-JJ-70-00015	Bearing 8x14x4	滚珠轴承	2	
			Bearing 8x14x4	止推轴承	1	
RCH-70-025-LLL for BE429, UH60, AS350, MD500, AH-6, OH-6 one set only	L Lever set		Washer 5x7x0.1	5*7*0.1 垫片	3	
			Washer 3.2x5x0.5	3.2*5*0.5 垫片	1	
			Bearing	滚珠轴承 3x7x3	2	
		1-JJ-70-00022	Washer 3x4.5x1.1	3*4.5*1.1 垫片	1	
		1-JJ-70-00023	L-Lever	大桨夹摇臂	1	

		1-JJ-70-00019	Screw M3x12	M3*12 杯头螺丝	1	
			Screw M2.5x16	M2.5*16 半圆头内六角螺丝	1	
		1-JJ-70-00018	Self Locking Nut M3	防滑螺母	1	
RCH-70-025-SL	Ball link f. L-Lever	1-60-XY-10	Link connector	不锈钢连接件	1	
			Ball link frame	球头扣	1	
			M2.5x12 round hex	M2.5*12 半圆头内六角螺丝	1	
RCH-70-025-ST for AH-1, Airwolf, B222, B412, B212, UH1D/N only	Swash timer		Swash timer assy	长轴用十字盘固定件	1	
			M4x4 set hex	M4*4 机米	1	
RCH-70-025-KNL	Lever f. Swash timer		Rod 2.3x92mm	2.3*92 长主轴拉杆	2	
		1-JJ-70-00025	Ball link frames	球头扣	4	
RCH-70-026	Ball link set 5mm	1-JJ-70-00025	Ball Link frame set	球头扣	20	
RCH-70-027V2	Washer set		Washer 11x4x1.5	11*4*1.5 铜垫片	4	
			Washer 11.5x8x1.3	11.5*8*1.3 铜垫片	4	

RCH-70-029V2	Lever set	1-JJ-70-00034	Rod 2.3x20mm	2.3*20 副翼拉杆	2	
		1-JJ-70-00035	Rod 2.3x78mm	2.3*78 舵机拉杆 1	3	
RCH-70-030	Lower swash servo levers	1-JJ-70-00046	Right servo lever	右过渡升降摇臂	1	
		1-JJ-70-00047	Left servo lever	左过渡升降摇臂	1	
		1-JJ-70-00048	Ball link 5mm	球头	4	
			Bearing MR105ZZ	5*10*4 滚珠轴承	4	
RCH-70-033	Lower swash center lever	1-JJ-70-00042	Lever 3	升降摇臂 3	1	
			M2.5x8 socket	M2.5*8 杯头螺丝	1	
		1-JJ-70-00048	Ball link 5mm	球头	1	
RCH-70-034	Aft Tail boom holder	1-JJ-70-00094	Aft Tail boom holder	前尾传动尾管夹座	1	
			M3x6 round hex	M3*6 半圆头螺丝	1	
			M3x8 socket	M3*8 杯头螺丝	4	
			M3x10 socket	M3*10 杯头螺丝	1	
RCH-70-035	Servo holder set	1-JJ-70-00064	Servo holder fwd	舵机固定件 1	1	

		1-JJ-70-00065	Servo holder aft	舵机固定件 2	1	
			M2.5x8 round hex	M2.5*8 半圆头内六角螺丝	12	
			Washer 3.2x7x0.5	3.2*7*0.5 垫片	12	
			M3x8 socket	M3*8 杯头螺丝	4	
RCH-70-036	Uniball set	1-JJ-70-00068	Uniball 5mm	球头	6	
RCH-70-037	Bearing block tail shaft	1-JJ-70-00088	Bearing Block Set	过渡尾传动轴承座	1	
			Bearing MR105ZZ	5*10*4 滚珠轴承	1	
			M3x8 socket	M3*8 杯头螺丝	4	
RCH-70-038-222/407	Tail shaft 5x73.5	1-80-22-00001	Tail Shaft Set	过渡尾传动轴	1	
RCH-70-038-AH64	Tail shaft 5x122	1-70-AP-00021	Tail Shaft Set	过渡尾传动轴	1	

RCH-70-038-AH1/412/UH1D/225/145T1/EC665	Tail shaft 5x68	1-70-YJ-00001	Tail Shaft Set	过渡尾传动轴	1	
RCH-70-038-AS/AW	Tail shaft 5x83	1-JJ-70-00087 -1	Tail Shaft Set	过渡尾传动轴	1	
RCH-70-038-UH60	Tail shaft 5x140	1-JJ-70-00152-V2	Tail Shaft Set	过渡尾传动轴	1	
RCH-70-038-EC135	Tail shaft 5x75	1-70-E5-00025	Tail Shaft Set	过渡尾传动轴	1	
RCH-70-038-MD/429/105	Tail shaft 5x52	1-80-GZ-00001	Tail Shaft Set	过渡尾传动轴	1	
RCH-70-039V2	Fwd tail bevel set	1-JJ-70-00094	Tail boom holder aft		1	
		1-JJ-ZZ-00002	Tail boom holder fwd		1	
		1-JJ-ZZ-00001	Tail bearing holder		1	
		1-JJ-ZZ-00005	Tail bearing distancer		1	

		1-JJ-ZZ-00003	Sideframes		2	
		1-JJ-ZZ-00004	Distancer rod		1	
		1-JJ-ZZ-00006	Brasss spacer		1	
			M4x4 set hex	M4*4 机米螺丝	1	
			Bearing MR6701ZZ	12*18*4 滚珠轴承	2	
			M3x6 round hex	M3*6 半圆头内六角螺丝	6	
			M2.5x8 socket	M2.5*8 杯头螺丝	2	
			Washer 12x15x0.1	12*15*01 垫片	4	
			Washer 5x7x0.5	5*7*0.5*垫片	5	
		1-60-WJ-00004	Tail gear 4	尾伞齿轮 4	1	
		1-60-WJ-00003	Tail gear 3	尾伞齿轮 3	1	
RCH-70-039G	Aft tail bevel set	1-60-WJ-00004	Tail frame gear	尾伞齿轮 4	1	
			M4x4 set hex	M4*4 机米螺丝	1	
		1-60-WJ-00003	Tail frame gear	尾伞齿轮 3	1	

			Washer 12x15x0.1	12*15*0.1 垫片	4	
RCH-70-040	Tail boom	1-JJ-70-00095	Tail boom 21.5mm	尾管	1	
RCH-70-041	Torque tube set	1-JJ-70-00096	Tail boom shaft	尾传动轴	1	
		12-02-02006	Bearing holder	轴承套	2	
		1-55-70-00015	Bearing MR148ZZ	轴承 8x14x4	2	
		11-600jRCH-70-002	X Connector	600C 尾转折传动轴铝件	2	
RCH-70-042	Tail servo holder	1-JJ-70-00097	Tail servo frame	尾舵机固定板	1	
		1-JJ-70-00098	Tail servo clamp	尾舵机固定环	2	

				M3*10 杯头螺丝	2	
RCH-70-044	Tail pushrod	1-JJ-70-00103	Tail pushrod 702mm	尾拉杆	1	
	Ball link 5mm	1-JJ-70-00025	Ball link 5mm	球头扣	2	
RCH-70-045	Tail support set	1-JJ-70-00104	Tail support holder	尾支撑铝接头	4	
		1-JJ-70-00105	Bolt 1.5x7.8	尾支撑插销	4	
	Tail support rod	1-JJ-70-00106	Tail support rod	尾支撑碳纤维棒	2	
RCH-70-046	Tail support clamp	11-600UH1-007	Tail support clamp	Tail boom clamp	1	

RCH-70-047-2B	Tail shaft 2B	1-60-WJ-00010	Washer 5x7x5.7	垫片	1	
		1-60-WJ-00011	Washer 5x7x2.1	垫片	1	
		1-60-WJ-00006	Tail shaft 2 blade	2 桨尾轴	1	
RCH-70-049	Center hub 2B	1-JJ-70-00110	Center hub	2 桨尾中联	1	
			M4x4 set hex	M4*4 机米螺丝	1	
			Washer 3.2x7x0.5	3.2*7*0.5 垫片	2	
			M3x8 socket	M3*8 杯头螺丝	2	
RCH-70-050	Pitch slider set	1-JJ-70-00111	Pitch lever	2 桨尾推	1	
		1-JJ-70-00112	Pitch slider	尾推组件 1	1	
		1-JJ-70-00113	Pitch sleeve	尾推组件 2	1	
		1-JJ-70-00122	Washer 7x8.5x4	垫片	1	
		1-JJ-70-00131	M2x10 socket half thread	M2*10 杯头内六角半牙螺丝	2	
		1-JJ-70-00100	Bearing MR117ZZ	7*11*3 滚珠轴承	2	
		1-JJ-70-00048	Ball link 5mm	球头	1	

RCH-70-051	Dog bone set	1-JJ-70-00107	Dog bone	2 桨尾拉杆	2	
		1-JJ-70-00108	Washer 2x3x4	垫片	2	
		1-JJ-70-00125	Sleeve 2x5x9.5	垫片	2	
		1-JJ-70-00126	Washer 2x5x0.5	垫片	2	
			M2 nyloc nut	M2 防松螺母	2	
	Screw M2x17	1-JJ-70-00130	M2x17 socket half thread	M2*17 杯头内六角半牙螺丝	2	
RCH-70-052	Support	1-JJ-70-00123	Pitch lever support	尾 L 摇臂支撑件	1	
			M2x5 socket	M2*5 杯头内六角螺丝	2	
RCH-70-053-1	Tail lever set	1-JJ-70-00114	Washer 3x4x0.5	垫片	2	
		1-JJ-70-00115 和 1-JJ-70-00115-1	L-Lever	1 号尾 L 摇臂	1	
			Bearing MR63ZZ	3*6*2.5 滚珠轴承	2	
		1-JJ-70-00068	Uniball 5mm	球头	1	
			Sleeve 3x4x6	3*4*6 铜套	1	
			M2 nyloc nut	M2 螺母	1	

			M3x16 socket	M3*16 杯头内六角螺丝	1	
RCH-70-053-2	Tail lever set	1-JJ-70-00114	Washer 3x4x0.5	垫片	2	
		1-JJ-70-00115 和 1-JJ-70-00115-1	L-Lever	2 号尾 L 摇臂	1	
			Bearing MR63ZZ	3*6*2.5 滚珠轴承	2	
		1-JJ-70-00068	Uniball 5mm	球头	1	
			Sleeve 3x4x6	3*4*6 铜套	1	
			M2 nyloc nut	M2 螺母	1	
			M3x16 socket	M3*16 杯头内六角螺丝	1	
RCH-70-054	Frame spacer	1-JJ-70-00119	Frame Spacer	尾侧板固定柱	1	
RCH-70-055	Tail frame 1	1-JJ-70-00117	Tail Frame 1	尾测板 1	1	
		1-JJ-70-00123	Pitch lever support	尾 L 摇臂支撑件	1	
			M2x5 socket	M2*5 杯头内六角螺丝	2	
			Bearing MR105ZZ	5*10*4 滚珠轴承	1	

			M3x6 round hex	M3*6 半圆头内六角螺丝	3	
RCH-70-056	Tail frame 2	1-JJ-70-00120	Tail frame 2	尾侧板 2	1	
			Bearing MR105ZZ	5*10*4 滚珠轴承	1	
			M3x6 round hex	M3*6 半圆头内六角螺丝	3	
RCH-70-057	Tail rotor hub	1-JJ-70-00118	Tail rotor hub	尾波箱轴承座	1	
			M3x12 socket	M3*12 杯头内六角螺丝	2	
			M3x6 round hex	M3*6 半圆头内六角螺丝	5	
RCH-70-060	Main Belt	1-JJ-70-00146	Main Belt	3MGT 皮带	1	
RCH-70-061	Screw M3x17	1-JJ-70-00002	M3x17 socket half thread	杯头内六角螺丝	2	
RCH-70-066	Screw M4x26-7	1-JJ-70-00010	M4x26 socket half thread	杯头内六角螺丝	4	

RCH-70-063	Screw M4x24-6.5	1-JJ-70-00006	M4x24 socket half thread	半圆头内六角螺丝 板牙	2	
RCH-70-064	Self Locking Nut M4	1-JJ-70-00007	M4 nyloc nut	防滑螺母	6	
RCH-70-065	Screw M3x20	1-JJ-70-00128	M3x20 socket half thread	杯头内六角螺丝 板牙	2	
RCH-70-066	Screw M2x10	1-JJ-70-00131	M2x10 socket half thread	杯头内六角螺丝 板牙	2	
RCH-70-067	Screw M2x14	1-JJ-70-00140	M2x14 socket half thread	杯头内六角螺丝 板牙	4	
RCH-70-068	Tail grip bearing	1-JJ-70-00013	Thrust Bearing F6-14M	推力轴承 6x14x5	4	
RCH-70-069	Tail boom bearing	1-JJ-70-00015	Bearing MR148ZZ	滚珠轴承 8*14*4	3	

RCH-70-070	Servo rod guides	1-JJ-70-00040	Servo rod guide	尾拉杆支撑架	3	
RCH-70-071	Bearing set 1	1-JJ-70-00045	Bearing MR105ZZ	滚珠轴承 5x10x4	12	
RCH-70-072		1-JJ-70-02006	Bearing holder	轴承套	2	
		1-JJ-70-00015	Bearing MR148ZZ	轴承 8x14x4	2	
RCH-70-073	Bearing set 2	1-JJ-70-00055	Bearing 6901-2RS	滚珠轴承 12x24x6	2	
RCH-70-074	Bearing set 3	1-JJ-70-00056	Bearing 6800-ZZ	滚珠轴承 10x19x5	2	
RCH-70-080	Bearing set 4	1-JJ-70-00100	Bearing MR117ZZ	滚珠轴承 7x11x3	2	
RCH-70-081	Bearing set 5	1-JJ-70-00101	Bearing MR63ZZ	滚珠轴承 3x6x2.5	2	

RCH-70-082	Blade grip 2B	1-JJ-70-00109	Blade grip 2B	尾桨夹	2	
RCH-70-083	Bearing set 6	1-JJ-70-00124	Bearing F5-10M	止推轴承 5x10x4	2	
RCH-70-090	Tail pitch links set	1-JJ-70-00138	Sleeve 2x5x6.5	垫片	4	
		1-JJ-70-00139	Ball Links	拉杆	4	
			M2x12 socket	M2*12 杯头内六角螺丝	4	
RCH-70-093	Uniball set	1-JJ-70-00142	Uniball 5mm	5mm 球头	4	
RCH-70-094	Pitch lever set 4B	1-JJ-70-00143	Pitch lever 4 blade	4 桨尾推	1	
		1-JJ-70-00112	Pitch slider	尾推组件 1	1	
		1-JJ-70-00113	Pitch sleeve	尾推组件 2	1	
		1-JJ-70-00122	Washer 7x8.5x4	垫片	1	
		1-JJ-70-00048	Ball link 5mm	球头	1	

		1-JJ-70-00142	Uniball 5mm	5mm 球头	4	
		1-JJ-70-00100	Bearing MR117ZZ	7*11*3 滚珠轴承	2	
RCH-70-095	Pitch lever set 3B	1-JJ-70-00144	Pitch lever 3 blade	3 桨尾推	1	
		1-JJ-70-00112	Pitch slider	尾推组件 1	1	
		1-JJ-70-00113	Pitch sleeve	尾推组件 2	1	
		1-JJ-70-00122	Washer 7x8.5x4	垫片	1	
		1-JJ-70-00048	Ball link 5mm	球头	1	
		1-JJ-70-00142	Uniball 5mm	5mm 球头	3	
		1-JJ-70-00100	Bearing MR117ZZ	7*11*3 滚珠轴承	2	
RCH-70-096	Tail shaft set 3-4B	1-JJ-70-00145	Tail shaft 3/4 blade	3-4 桨尾轴	1	
		1-60-WJ-00010	Washer 5x7x5.7	垫片	1	
		1-60-WJ-00011	Washer 5x7x2.1	垫片	1	
RCH-70-097	Washer 12x18x0.1	1-60-WJ-00015	Washer 12x18x0.1	垫片	8	

RCH-70-100	Ball link 5mm	1-JJ-70-00030	Ball link 5mm	球头	6	
RCH-70-101	Ball link 5mm	1-JJ-70-00048	Ball link 5mm	球头	6	
RCH-70-104	Bearing 12x18x4	1-JJ-70-00091	Bearing MR6701-2RS	滚珠轴承 12x18x4	8	
RCH-70-105	Tail rotor gear set	1-60-WJ-00004	Tail frame gear	尾伞齿轮 4	1	
			M4x4 set hex	M4*4 机米螺丝	1	
		1-60-WJ-00002	Tail frame gear	尾旋翼伞齿轮 2	1	
			Washer 12x15x0.1	12*15*0.1 垫片	4	

RCH-70-106	Washer set	1-JJ-70-00089	Washer 10x13x0.1	垫片 10x13x0.1	4	
RCH-70-108-V2	Tail spindle set	1-JJ-70-00141	Tail spindle	V2 版尾横轴	4	
RCH-70-109-V2	Rotor Hub 3 blade	1-JJ-70-00155	Rotor Hub 3 blade	尾旋翼 3 浆中联	1	
			M3x3 set hex	M3*3 机米螺丝	3	
			M2x14 socket half thread	M2*14 杯头半牙螺丝	1	
			M2 nyloc nut	M2 防松螺母	1	
RCH-70-110-V2	Rotor Hub 4 blade		Rotor Hub 4 blade	尾旋翼 4 浆中联	1	
			M3x3 set hex	M3*3 机米螺丝	4	
			M2x14 socket half thread	M2*14 杯头半牙螺丝	1	
			M2 nyloc nut	M2 防松螺母	1	
RCH-70-120	2B tethering shaft		Tethering shaft	2 桨头横轴	1	
			Washer 4x11x1.5	4*11*1.5 铜垫片	2	

			M4x10 socket	M4*10 杯头螺丝	2	
RCH-70-U001	Main blade grip			大桨夹	1	
RCH-70-TRH-2V2	Tail rotor 2B			2 桨尾旋翼	1	
RCH-70-TRH-3V2	Tail rotor 3B			3 桨尾旋翼	1	
RCH-70-TRH-4V2	Tail rotor 4B			4 桨尾旋翼	1	
RCH-70-LRPM36T	2nd stage gear 30/36		MD500/407/AW/412/UH1D/BO105/AH1/222/225/AS350		1	
RCH-70-LRPM40T	2nd stage gear 40/32		429/UH60/AH64/EC-145T1		1	

RCH-70-RH12-2V2	Rotor head 2 blades(12mm) , V2 version			2 桨旋翼头 (金属桨夹) 12MM	1	
RCH-70-RH12-2V2-AW	Rotor head 2 blades(12mm) , V2 version			2 桨旋翼头 (金属桨夹) AW-12MM	1	
RCH-70-RH12-3V2	Rotor head 3 blades(12mm) , V2 version			3 桨旋翼头 (金属桨夹) 12MM	1	
RCH-70-RH10-3V2	Rotor head 3 blades(10mm) , V2 version			3 桨旋翼头 (金属桨夹) 10mm	1	
RCH-70-RH12-4V2	Rotor head 4 blades(12mm) , V2 version			4 桨旋翼头 (金属桨夹) 12mm	1	
RCH-70-RH10-4V2	Rotor head 4 blades(10mm) , V2 version			4 桨旋翼头 (金属桨夹) 12mm	1	
RCH-70-RH12-5V2	Rotor head 4 blades(12mm) , V2 version			5 桨旋翼头 (金属桨夹) 12mm	1	

3	Rotor head 4 blades(10mm) , V2 version			5 桨旋翼头 (金属桨夹) 10mm	1	
RCH70-MSS	Main shaft support	1-80-3Z-0001	Support block	主轴下固定座	1	
			M3x8 socket	M3*8 杯头螺丝	4	
			Bearing 6001-ZZ	28*12*8 轴承	1	
RCH70-SS	Motor shaft support			马达固定件	1 套	
RBN-70-058-EC135	9pc ec-135 Tail Blade			涵道桨	9	
RBN-70-e5-SET-1	Tail pushrod incl. guide, carbon fiber			拉杆/碳纤棒/固定件组		
RBN-70-e5-SET-4	Fenestron Scale Clamp					
				PU 件凹	1	

				PU 件凸	1	
				M2.5*20 半圆头内六角螺丝	3	
				M2.5*12 半圆头内六角螺丝	2	
RBN-70-e5-SET-5	Tail frame gear	1-70-e5-00033	Bevel gear	1-70-E5-00033	1	
			M4x4 set hex	M4*4 机米螺丝	1	
		1-60-WJ-00002	Bevel gear	尾旋翼伞齿轮 2	1	
			Washer 12x15x0.1	12*15*01 垫片	4	
RBN-70-e5-SET-6	Fenestron pitch unit	1-70-e5-00013			1	
		1-70-e5-00014			1	
		1-70-e5-00019			1	
		1-70-e5-00007			1	
		1-70-e5-00015			1	
		1-70-e5-00010			1	
		1-70-e5-00017			1	

		1-70-e5-00018			1	
		1-70-e5-00011			3	
		1-70-e5-00012			1	
			Washer 2.1x4x0.5	2.1*4*0.5 垫片	3	
		M2*18	M2x18 socket	M2*18 杯头螺丝	3	
		M2*4	M2x5 CS screw	M2*4 沉头螺丝	3	
		Bearing 7x11x3	Bearing MR117ZZ	7*11*3 滚珠轴承	2	
RBN-70-e5-00006V2		1-70-e5-00006V2		涵道中联	1	
RBN-70-e5-SET-7		1-70e5-00024	Tail blade grip	涵道桨夹组	1	
			Bearing	6*10*2.5 滚珠轴承	1	
			Bearing	6*10*3 滚珠轴承	1	
	.		C-Clip 6mm	6MM 弹簧介子	1	

RBN-70-e5-00088		1-70-e5-00088	Bearing holder	桨夹杯	1	
RBN-70-00078-w	Belt pulley set	1-JJ-70-00078-W	Belt Pulley	涵道皮带齿	1	
		M2.5*20	M2.5x20 socket	M2.5*20 杯头螺丝	1	
			M2.5 nyloc nut	M2.5 防松螺母	1	
RBN-70-00073-w	Belt pinon	1-JJ-70-00073-W	Belt pinion 22T	22T 涵道皮带齿	1	
			M4x4 set hex	M4*4 机米螺丝	2	
RBN-70-e5-00032	BELT 255T		Belt 255T	255-3MGT 6MM 宽度	1	
RBN-DH4S	Door handle set 4pcs		Door handle	门把手组	各*2	
RBN-EM6S	Tail boom nut set		M2 wooden nut	M2 反爪牙螺母	6	
			M2x8 round hex	M2*8 半圆头内六角螺丝	6	

RBN-TS4S	Door hinge set 2pc		Door hinge	普通荷叶组	4	
RBN-TS2S	Door hinge set 2pc		Door hinge extended	尼龙荷叶组	2	
RBN-HWU-800	Swash lever upgrade kit	1-JX-70-18001	Bearing block 1	轴承架 1	1	
		1-JX-70-18002	Bearing block 2	轴承架 2	1	
		1-JX-70-18003	Lever 1	摇臂 1	2	
		1-JX-70-18004	Brass sleeve	铜套 17.5MM	2	
		1-JX-70-18005	Lever 2	摇臂 2	1	
		1-JX-70-18006	Lever 3	摇臂 3	1	
		1-JX-70-18007	Lever 4	摇臂 4	1	
		1-JX-70-18008	Washer 5x7x1.2	垫片 5*7*1,2	2	
		1-JX-70-18009	Pitch shaft	不锈钢轴	2	
		1-JX-70-18010	Push rod 78mm	2.3 拉杆 78MM	3	

		1-JJ-70-00025	Ball Link Set	球头扣	6	
		1-JX-70-00051	Shaft 5x62	62*5 轴	1	
		1-JJ-70-00048	Ball link	球头	5	
			Washer 5x7x0.1	5*7*0.1 垫片	12	
			Washer 3.2x7x0.5	3.2*7*0.5 垫片	6	
			M3x6 round hex	M3*6 半圆头内六角螺丝	6	
			M2.5x12 socket	M2.5*12 杯头螺丝	4	
			M2.5x8 socket	M2.5*8 杯头螺丝	1	
			M2.5 nyloc nut	M2.5 防松螺母	4	
		1-JJ-70-00045	Bearing MR105ZZ	滚珠轴承 5x10x4	10	
RBN-KHSM-BHA	Blade grip lever 3/4/5B	1-JJ-70-00009-2-1	Lever	4 桨长轴桨夹摇臂	1	
			M2.5x5 socket	M2.5*5 杯头螺丝	2	
	Blade grip lever 2B		Lever incl ball link	2 桨长轴桨夹摇臂	1	
			M2.5x5 socket	M2.5*5 杯头螺丝	2	

RBN-ST-S15	Screw set		M3x10 socket	M3*10 杯头螺丝	40	
			M3x12 socket	M3*12 杯头螺丝	6	
RBN-PUH-8	Dummy Rotorhead for 800 UH1D			800UH1D/N 平衡翼		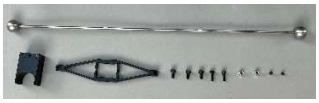
RCH-70-WBX	140 degree metal tail gearbox			700 轴传通用全金属尾波箱		
RCH-70-WBX01	Metal tail gearbox gears set			700 轴传通用尾波箱扇齿		
RCH-70-WBX-AH64	150 degree metal tail gearbox for AH-64			700AH64 全金属尾波箱		
RCH-70-WBX01-AH64	Metal tail gearbox gear set for AH-64			700AH64 尾波箱扇齿		
600WBX	600 tail gearbox nylon			600 轴传通用尾波箱		

600WBX01	600 tail geabox gear set			600 轴传通用尾波箱扇齿		
500WBX	500 tail gearbox nylon			500 轴传通用尾波箱		
500WBX01	500 tail gearbox short boom set			500 轴传通用短尾管+轴+拉杆		
500WBX02	500 tail geabox gear set			500 轴传通用扇齿		
500WBX03	500 tail geabox gear set			500 轴传通用扇齿		

Appendix C scale replacement parts

RCH-70-003-UH1N		800 UH1N 脚架组	800 UH1N Landing gear
RCH-70-040-UH1N		800 UH1N 尾管	800 UH1N Tail tube 21.5x 795mm
RCH-70-041-UH1N		800 UH1N 尾传动轴	800 UH1N Torque tube783mm
RCH-70-044-UH1N		800 UH1N 尾拉杆	800 UH1N Pushrod set 700mm
RCH-70-058-UH1N		800 UH1N 尾桨	800 UH1N Tail blade 105mm
RCH-70-059-UH1N		800 UH1N 主桨	800 UH1N Main blade 800mm
RCH-70-111-UH1N		800 UH1N 武器组	800 UH1N Weapon set
RCH-70-112-UH1N		800 UH1N 平尾	800 UH1N tail stabilizer
RCH-70-113-UH1N	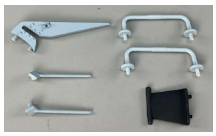	800 UH1N 装饰件	800 UH1N Scale part set
RCH-70-114-UH1N	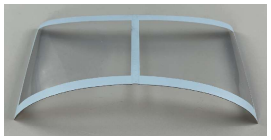	800 UH1N 前窗	800 UH1N front window
RCH-70-115-UH1N		800 UH1N 全套窗	800 UH1N all window set

RCH-70-116-UH1N	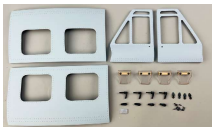	800 UH1N 全套门	800 UH1N door set
RCH-70-117-UH1N		800 UH1N 像真座椅	800 UH1N cockpit set
RCH-70-118-UH1N		800 UH1N 水印	800 UH1N decal sheet
RCH-70-130-UH1N		800 UH1N 引擎盖	800 UH1N engine nacelle
RCH-70-131-UH1N		800 UH1N 尾巴	800 UH1N tail boom
RCH-70-132-UH1N		800 UH1N 短尾管	800 UH1N short tail tube 21.5x218mm
RCH-70-133-UH1N		800 UH1N 短尾传动轴	800 UH1N short torque tube 223mm
RCH-70-134-UH1N		800 UH1N 短拉杆	800 UH1N short pushrod 264mm
RCH-70-135-UH1N		800 UH1N LED 灯	800 UH1N LED set
RCH-70-136-UH1N		800 UH1N 螺丝包	800 UH1N hardware parts