Ignition Kill wiring diagram

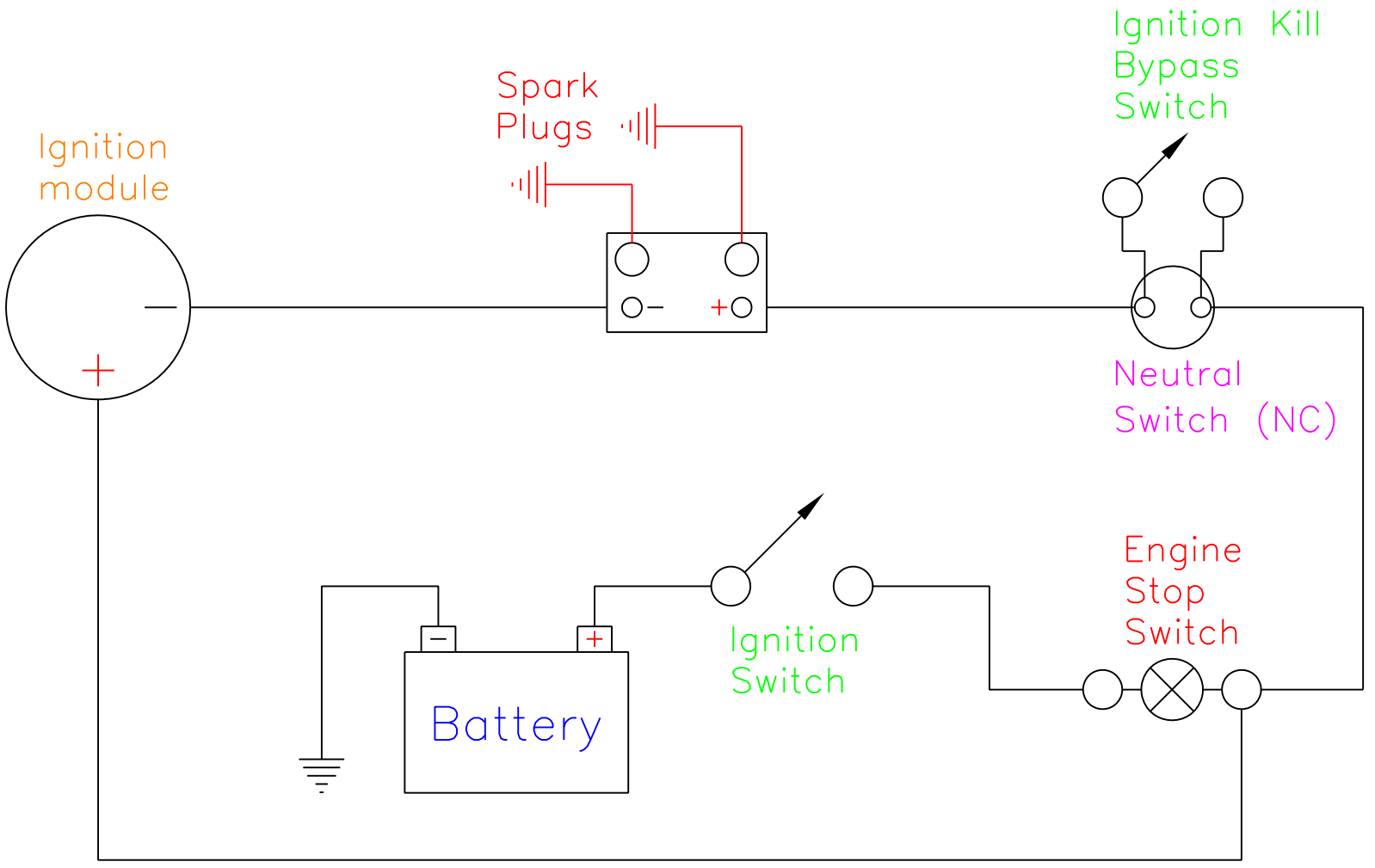

Notes:

1) Turn Ignition Kill Bypass Switch 'ON' to run engine in neutral and 'OFF' to activate Ignition Kill system
2) Shift Kill Switch (AKA Neutral Switch) must interupt power to the 12V side of the coil, NOT the engine module
3) Make sure that the power to the Ignition Module comes from the Engine Stop Switch
4) A Normally Closed (NC) Neutral Switch must be used