# Viridian EV Solar Charge Controller Installation Instructions

## Specification:

Power Supply: 100-240V AC 50/60Hz

Dimensions (L W D):

SCC Base Unit: 98mm x 23mm x 57.5mm

SCC Solar Sensor: 40mm x 40mm x 22mm

Maximum Resistance of Cable from SCC to Remote: 7Ω per conductor

35mm DIN Rail Mounting

Designed for PV systems with capacity ranging from 0-10KWH

IP Rating: IP20

Supplied with wall mount. Solar remote fitted with ¼"-20 mounting thread

Compatible with all Variants of Viridian and Zero Carbon World EPC

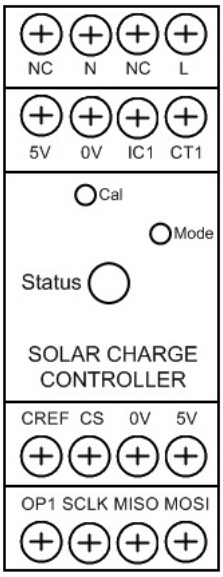


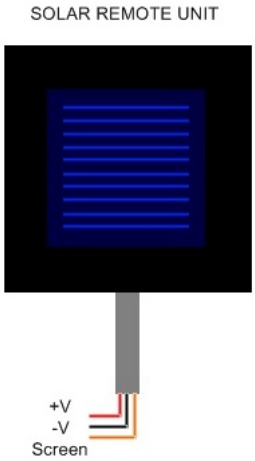


## Installation

It is recommended that the Viridian SCC be mounted within the Charge Point enclosure. The mode switch on top of the unit should be accessible to users and the LED status indicator visible. The recommended mounting location within the Viridian vCharge Classic enclosure is the top DIN rail on the right hand side. A suitable gland should be installed at the cable entry point from the Solar Remote Unit to the EVSE. Recommended minimum wire gauge for terminal connections is 20AWG.

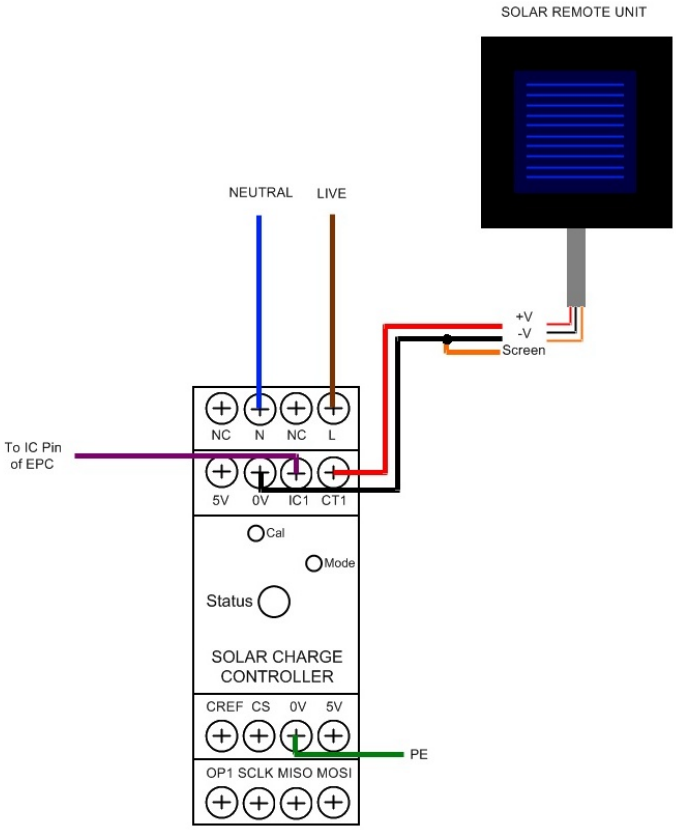


The Solar Remote Unit should ideally be fixed to a wall facing the same direction as the properties PV installation. Performance of the system will depend on the solar remote receiving the same solar conditions as the main PV installation.

The Solar Remote unit is supplied with a wall mountable bracket. Should an alternate mounting solution be required the SRU features a standard ¼"-20 tripod style female screw fitting on the base.

## Calibration

The Viridian SCC is designed to be compatible with a wide array of solar installations. Before first use the SCC must be calibrated to match the size of the PV system at the installation location. This process requires a multimeter and a small screwdriver.
Connect your multimeter to the SCC, The red lead should be connected to the CREF terminal and the black lead to the 0V terminal. Power on the SCC and adjust the voltage on the CREF pin to the relevant value in the table below using the calibration POT on the front of the unit. The SCC output can be further fine tuned to match the system if required by comparing the current draw from a vehicle with the output reading from the inverter located at the property and adjusting the value of CREF accordingly.

| PV System Size | CREF Voltage |
|---|---|
| 1KWH | 0.5V |
| 2KWH | 1.0V |
| 3KWH | 1.5V |
| 4KWH | 2.0V |
| 5KWH | 2.5V |
| 6KWH | 3.0V |
| 7KWH | 3.5V |
| 8KWH | 4.0V |
| 9KWH | 4.5V |
| 10KWH | 5.0V |